WORKSHOP MANUAL

NHR, NKR, NPR, NQR, NPS

BRAKES

SECTION 5

ISUZU

ISUZU

International Service & Parts
Tokyo, Japan

NOTICE

Before using this Workshop Manual to assist you in performing vehicle service and maintenance operations, it is recommended that you carefully read and thoroughly understand the information contained in Section-0A under the headings "GENERAL REPAIR INSTRUCTIONS" and "HOW TO USE THIS MANUAL".

All material contained in this Manual is based on latest product information available at the time of publication.
All rights are reserved to make changes at any time without prior notice.

Applicable Model

N Series		
NHR55	NPR58	NPS66
NHR69	NPR59	NPS71
NKR55	NPR65	NQR66
NKR58	NPR66	NQR70
NKR66	NPR69	NQR71
NKR69	NPR70	
NPR55	NPR71	

This manual is applicable to 1994 year model and later vehicles.

THIS MANUAL INCLUDES THE FOLLOWING SECTIONS:

SECTION NO.	CONTENTS
00	Service Information
5A	Hydraulic Brakes
5B	—
5C	Parking Brakes
5D	—
5E	Exhaust Brake

SECTION 00
SERVICE INFORMATION

CONTENTS

PAGE

Troubleshooting 00- 3
Main Data and Specifications 00- 15
Service Standard 00- 82
Servicing 00- 83
Fixing Torque 00- 94
Special Tools 00-105

MEMO

TROUBLESHOOTING

CONTENTS

PAGE

Brake System 00- 4
Hydraulic Booster 00- 8
Brake Lining 00-11
Brake Drum 00-12
Exhaust Brake 00-13
Parking Brakes 00-14
Hydromaster 00-14

BRAKE SYSTEM

PROBLEM	POSSIBLE CAUSE	CORRECTION
No Brakes	1. Restricted tubing or hose. 2. Brakes out of adjustment. 3. No fluid.	1. Replace defective parts. 2. Adjust.
Insufficient Brakes	1. Pedal improperly adjusted. 2. Worn linings/pads or drum/discs. 3. Plugged, crimped, restricted lines or hoses.	1. Adjust. 2. Replace as necessary. 3. Repair or replace.
Slow Brake Application	1. Pedal binding. 2. Wheel cylinder piston sticking. 3. Restriction in the lines. 4. Worn linings/pads or drums/discs.	1. Lubricate pivot pin, clean-check for foreign objects. 2. Repair the wheel cylinder. 3. Remove the restriction or replace the line. 4. Replace as necessary.
Uneven Braking (Front or Rear Brakes not Working)	1. Damaged hydraulic lines. 2. No brake fluid at the master cylinder. 3. Safety valve not opened.	1. Repair or replace. 2. Check for plugged, kinked or damaged hose to the reservoir. 3. Correct.
Wet Weather: Brakes Grab or won't Hold	1. Linings too sensitive to water. 2. Dirty brakes. 3. Bent mounting plate – opening. 4. Scored drums/discs.	1. Replace in axle sets. 2. Clean out. 3. Replace. 4. Machine in pairs. Replace if necessary.
Brakes Squeak	1. Mounting plate bent or shoes twisted. 2. Metallic particles or dust imbedded in the lining. 3. Lining rivets loose or lining not held tightly against the shoe at the ends. 4. Drums distorted tampered, or not square. 5. Incorrect lining/pad. 6. Mixed size linings. 7. Weak or broken return spring. 8. Loose wheel bearings. 9. Loose mounting plate, drum, wheel cylinder. 10. Linings/pads located wrong on the shoes. 11. Linings/pads worn out. 12. Lining glazed. 13. Cracked or threaded drums/discs.	1. Replace damaged parts. 2. Replace the linings/pads in axle sets. 3. Replace the rivets and/or tighten the lining by riveting. 4. Machine or replace drums/discs. 5. Replace the linings/pads in axle sets. 6. Use all standard or oversize linings in a brake. 7. Replace the return spring. 8. Tighten to the proper setting. 9. Tighten. 10. Install the linings correctly. 11. Reline the brakes. 12. Replace. 13. Replace in axle pairs.
Brakes Chatter	1. Incorrect lining/pad to drum/disc clearance. 2. Loose mounting plate. 3. Grease, fluid, road dust on the lining pad. 4. Weak or broken return spring. 5. Loose wheel bearings. 6. Drums out-of-round.	1. Adjust to specification. 2. Tighten securely. 3. Clean or reline. 4. Replace the return spring. 5. Readjust. 6. Machine the drums in axle sets.

BRAKE SYSTEM (CONT.)

PROBLEM	POSSIBLE CAUSE	CORRECTION
Brakes Chatter (Cont.)	7. Discs warped. 8. Cocked or distorted shoes. 9. Distorted, tapered, or barrel-shaped drums. 10. Incorrect lining/pad material. 11. Linings/pads worn out. 12. Lining loose on the shoes. 13. Foreign material imbedded in the linings/pads. 14. Cracked or threaded drums/discs.	7. Machine the discs in axle sets. 8. Straighten or replace. 9. Machine drums in pairs. Replace if necessary. 10. Reline with correct linings/pads. 11. Reline the brake. 12. Rerivet the linings to the shoes. Replace if necessary. Check for damaged or distorted shoes. 13. Replace the linings/pads in axle sets. 14. Replace in axle pairs.
Shoe Click	1. Return spring weak. 2. Shoe bent.	1. Replace the spring. 2. Straighten or replace.
Noise and Chatter Squealing, clicking, or scraping sound upon brake application	1. Bent, damaged or incorrect shoes. 2. Worn out lining/pad. 3. Foreign material embedded in the lining/pad. 4. Broken shoe return spring. 5. Cracked or threaded drums/discs (lathe marks).	1. Replace with the correct shoes and lining. Always replace in axle sets. 2. Replace the shoes and lining/pad in axle sets. 3. Replace the shoes and lining/pad in axle sets. 4. Replace the return spring. 5. Replace the drums/discs in axle sets.
Pulls to One Side	1. Grease or fluid soaked lining/pad. 2. Loose wheel bearings, loose (or distorted) mounting plate on the rear or front axle or loose spring bolts. 3. Linings/pads not of the recommended kind. 4. Tires not properly or evenly inflated or unequal wear of tread. Different tread non-skid design. 5. Water, mud, etc., in the brakes. 6. Wheel cylinder sticking. 7. Weak or broken shoe return spring. 8. Out-of-round drums or different sized drums on the same axle. 9. Brake dragging. 10. Weak chassis springs, loose U-bolts, loose steering gear, etc. 11. Loose steering. 12. Unequal camber. 13. Restricted brake line or hose.	1. Replace in axle sets. 2. Adjust the wheel bearing, tighten (or replace) the mounting plate to the axle and tighten the spring bolts. 3. Install recommended linings/pads. Install the shoes correctly. 4. Inflate the tires to recommended pressures. Rearrange the tires so that a pair of non-skid tread surfaces of similar design and equal wear will be installed on the front wheels, and another pair with like tread will be installed on the rear wheels. 5. Remove any foreign material from all of the brake parts and inside of the drums. 6. Repair or replace the wheel cylinder. 7. Check the spring-replace distorted, open coiled, or cracked spring. 8. Refinish or replace the drums in axle pairs. 9. Check for loose lining. Adjust. (Refer to "DRAGGING BRAKES".) 10. Replace the spring, tighten the U-bolts, adjust the steering gear, etc. 11. Repair and adjust. 12. Adjust to "Specifications". 13. Check for soft hose or damaged lines. Replace as necessary.

BRAKE SYSTEM (CONT.)

PROBLEM	POSSIBLE CAUSE	CORRECTION
Pulls to One Side (Cont.)	14. Wheel cylinder size different on opposite sides. 15. Loose kingpin. 16. Distorted, damaged, or scored drum/disc. 17. Front end alignment. 18. Excessively worn lining/pad. 19. Uneven adjustment of brake lining clearance. 20. Water/wet linings.	14. Replace with correct cylinders. 15. Replace the kingpins or bushing. 16. Refinish the drums/discs in axle pairs. Replace if necessary. 17. Align the front end. 18. Replace in axle sets. 19. Adjust the brake lining clearance in all wheels. 20. Apply the brakes a few times while moving at a slow speed to dry the linings.
One Wheel Locks	1. Gummy lining/pad. 2. Tire tread slick. 3. Brake adjustment not correct. 4. Restricted brake line or hoses. 5. Incorrect linings/pads. 6. Grease or fluid soaked lining/pads. 7. Foreign material in the brakes.	1. Replace in axle sets. 2. Match up tire treads from side to side. 3. Adjust the brakes. 4. Check for soft hoses or damaged lines. Replace as necessary. 5. Replace. Linings/pads must be the same on the axle. 6. Replace in axle sets. 7. Remove the material.
Light Pedal Pressure-Brakes too Severe (Grabby Brakes)	1. Brake adjustment not correct. 2. Loose mounting plate on the front axle. 3. A small amount of grease or fluid on the lining/pad. 4. Incorrect lining/pad. 5. Wheel bearings loose. 6. Lining loose on the shoe. 7. Excessive dust and dirt in the drum. 8. Out-of-round drum.	1. Adjust the brakes. 2. Tighten the plates. 3. Replace the linings/pads. 4. Install factory specified linings/pads. 5. Adjust the wheel bearings. 6. Replace the lining or the shoe and lining. 7. Clean and sand the drums and linings. 8. Turn the drums in pairs or replace.
Low Pedal or Pedal Goes to Floor	1. Excessive clearance between the linings and drum. 2. Pedal stop not adjusted, or missing. 3. Weak break hose. 4. Leaking wheel cylinder. 5. Air in the hydraulic system. 6. Improper brake fluid (low boiling point). 7. Low fluid level. 8. Bent or distorted brake shoes. 9. Leaks at hydraulic line connections.	1. Adjust the brakes. 2. Adjust or install the pedal stop. 3. Replace with new hose. 4. Clean and rebuild. 5. Bleed the hydraulic system. 6. Flush the sytem and refill with recommended brake fluid. 7. Fill the reservoir with brake fluid; check for leaks and bleed system. 8. Replace in axle sets. 9. Check for hydraulic leaks and repair.

BRAKE SYSTEM (CONT.)

PROBLEM	POSSIBLE CAUSE	CORRECTION
Slow Brake Release	1. Foot pedal binding. 2. Restriction in the line. 3. Weak shoe return spring.	1. Lubricate the pivot pin; clean-check for foreign objects. 2. Remove the restriction or replace line. 3. Replace the spring.
Poor Assist or Loss of Assist	1. Low brake fluid level. 2. Air in the hydraulic system. 3. Weak brake hose. 4. Loss of vacuum. 5. No brake fluid at the master cylinder.	1. Fill the reservoir to the proper level. Bleed the system. 2. Locate the source of the air leak and repair. Bleed the system. 3. Replace. 4. Inspect for vacuum leaks or malfunctioning pump. Repair or replace as necessary. 5. Check for plugged, kinked, or damaged hose to the reservoir.
Brake Fade	1. Incorrect lining/pad. 2. Poor lining/pad contact. 3. Thin drum. 4. Dragging brakes. 5. All conditions listed under "PULLS TO ONE SIDE".	1. Replace with recommended lining/pad. 2. Grind the lining/pad to the proper radius; adjust. 3. Replace the drum. 4. Adjust. 5. All corrections listed under "PULLS TO ONE SIDE".
All Brakes Drag when Adjustment is Known to be Correct	1. Pedal does not return to stop. 2. Improper fluid. 3. Use of incorrect rubber parts.	1. Lubricate the pedal linkage; adjust the pedal. 2. Replace rubber parts and fill with the recommended brake fluid. 3. Install the proper parts.
One Wheel Drags	1. Weak or broken shoe return spring. 2. Brake shoe to drum clearance too small. 3. Loose wheel bearings. 4. Wheel cylinder piston cups swollen and distorted or piston stuck. 5. Pistons sticking in the wheel cylinder. 6. Drum out-of-round. 7. Disc warped. 8. Restricted brake line or hose. 9. Distorted shoe. 10. Defective lining/pad. 11. Loose or bent mounting plate. 12. Loose calipers.	1. Replace the return spring. 2. Adjust to specification. 3. Adjust or replace the wheel bearings. 4. Rebuild the cylinders. Flush the hydraulic system and fill with recommended fluid. 5. Clean or replace the pistons; clean the cylinder bore. 6. Machine the drum. 7. Machine the disc. 8. Check for soft hoses or damaged lines. Replace as necessary. 9. Replace. 10. Replace with the recommended lining/pad. 11. Tighten the fasteners; replace the plate. 12. Tighten the fasteners.

BRAKE SYSTEM (CONT.)

PROBLEM	POSSIBLE CAUSE	CORRECTION
Dragging Brakes	1. Improper fluid. 2. Brake pedal adjustment incorrect. 3. Incorrect shoe return spring. 4. Brake pedal linkage interference or binding. 5. Incorrect lining/pad. 6. All conditions listed under "ONE WHEEL DRAGS".	1. Flush the hydraulic system and fill with recommended brake fluid, and replace rubber components. 2. Adjust the pedal. 3. Replace the shoe return spring. 4. Free the linkage and lubricate. 5. Replace the linings/pads. 6. All corrections under "ONE WHEEL DRAGS".

HYDRAULIC BOOSTER

PROBLEM	POSSIBLE CAUSE	CORRECTION
Large force pressing on the brake pedal (boosting insufficient)	1. Booster operation insufficient • Large internal leakage • Sticking of the spool valve • Insufficient sliding around the input and output rods	• With the engine on, press the brake pedal repeatedly, and confirm the presence of manual operation. With regard to manual operation, turn the engine off, and judge whether the pedal is as stiff and its play is as small as when the pedal is pressed repeatedly ten times or more. • When there is manual operation, the hydro boost assembly is replaced.
Brake dragging	1. Bad dimensions of the booster • The amount of protrusion of the output rod is large	• Confirm whether the amount of protrusion of the output rod (the distance from surface of the master cylinder attachment flange to the end of the rod) is no greater than 18.2 mm. • If the above dimension is outside the range, replace the hydro boost assembly.
	2. Bad pedal circumference attachment dimensions • Clevis position dimension is large	• Confirm whether the clevis position dimension (the distance from surface of the vehicle attachment flange to the center of the clevis center) is in the range 109 ± 1mm. • If the above dimension is outside the range, loosen the lock nut and adjust the clevis position dimension to be inside the above range. After making this adjustment, be sure to securely tighten the lock nut and to do a stop lamp switch reconfirmation.
	3. Booster return is bad • Input-output rod circumference sticks • Bad spool valve operation	• With the engine on, repeatedly press the brake pedal and confirm the pedal return state. • If the pedal does not return, replace the hydro boost assembly as necessary.

HYDRAULIC BOOSTER (CONT.)

PROBLEM	POSSIBLE CAUSE	CORRECTION
Oil leakage	1. Hydro boost assembly external leakage • Leakage from the seal material	• If the oil leakage is caused by looseness in the piping connections, retighten the connections. • If there is oil leakage from the connections of the accumulator, replace the affected seals of the connections with new seals. • If there is any oil leakage from parts other than the above that are included in the hydro boost assembly, replace the hydro boost assembly or the repair setting parts (accumulator).
Bad brake operation (lack of smoothness in operation)	1. Poor operation of the booster • Input-output rod circumference sticks • Bad spool valve operation	• With the engine on, repeatedly press the brake pedal and confirm the pedal operation state. • If there is sticking or some other abnormality in the pedal operation, replace the hydro boost assembly as necessary.
Abnormal brake noise (when pressing the pedal)	1. Air in the hydraulic booster lines	• With the engine running, check the amount of hydraulic flud remaining in the reserve tank for the hydraulic booster. • If low, add fluid (Besco ATF III) and bleed to remove air as necessary before starting the engine. Operate the pump and repeatedly step on the pedal to confirm the gear noise (caused by cavitation).
	2. Water in the hydraulic fluid	• Check the color of the hydraulic fluid in the reserve tank for the hydraulic booster (normal: purple, abnormal: milky white). • If the hydraulic fluid is milky white, change the fluid (Besco ATF III) and bleed to remove air as necessary before starting the engine. Operate the pump and strongly press the pedal until reaching full boost range to confirm the gear noise (caused by cavitation). The length of time to keep the pedal pressed all the way down is no more than five seconds.
No pedal boosting effect immediately after turning the engine off	1. Faulty charge valve • Gas leaking from the accumulator • Leakage inside the charge valve	• Keep the engine running for more than 10 seconds. Turn off the engine, and within 60 seconds, step on the pedal once to confirm boosting effect. Boosting effect means the same pedal effort if the engine was running. • If boosting effect does not exist, either the hydraulic booster assembly or the accumulator may need to be replaced.

HYDRAULIC BOOSTER (CONT.)

PROBLEM	POSSIBLE CAUSE	CORRECTION
Warnng buzzer continuously sounds	1. Faulty hydraulic booster assembly • Faulty pressure switch • Leakage inside the charge valve	• Confirm that the electric devices (pressure switch, relay, buzzer, etc.) are working correctly. • If all are working correctly, pump the brake pedal at least 10 times after turning the engine off to reduce pressure in the hydraulic booster. Start the engine, and if the vehicle has a manual transmission, release the parking brake (with an automatic, put it in Drive). Check to see if the alarm stops within ten seconds (if it does, the electrical devices are working properly). • When testing the electrical devices, always keep your foot on the brake pedal with just enough pressure to prevent the vehicle from moving. If the alarm does not stop, the hydraulic booster assembly may have to be replaced.
Charge operation remains in effect	1. Bad charge valve operation • Bad valve switching operation	• Turn the engine on, and without pressing the brake pedal, check whether any charging sound continues, such as the sound of the fluid. • If it continues and will not stop, replace the hydro boost assembly as necessary.

NOTES

1. When the brake pedal is operated after the engine is turned off and the oil pump stops, during a few operations a fluid sound due to the flow of high-pressure oil or a sound of movement by the charge spool may be produced, but this sound is not abnormal; it merely indicates that boosting by the accumulator (accumulator operation) is proceeding normally.
   Also, a similar fluid sound is produced during quick operation of the brake pedal even if the engine is on, but this too is normal.
2. If the pressure of the oil in the accumulator drops with operation of the brake pedal after the engine is turned off or when the engine has been off for a long time, then immediately after the engine is turned on, fluid sound during charge valve operation or switching sound when charging ends will be produced, but this sound is not abnormal; it merely indicates that the accumulator is being normally charged.
   Also, a similar charging operation sometimes occurs and sound is sometimes produced when the pressure inside the accumulator drops even when the engine is on and charging has ended, due to such causes as rapid operation of the brake pedal, internal leakage that is too slight to affect brake performance, or a change in temperature; this too is normal.
3. When the brake pedal is pressed strongly as far as the booster full load region while the engine is on, sometimes sound is produced by the flow of hydraulic oil discharged from the oil pump, but this is not abnormal. Also, pressing the pedal in as far as this booster full load region can cause a significant increase in the oil temperature inside the oil pump and can lead to a failure, so keep the pedal pressed for no longer than 5 seconds.

BRAKE LINING

PROBLEM	POSSIBLE CAUSE	CORRECTION
Poor Contact at the Center of Shoe	1. Bell-mouthed drum. 2. Distorted mounting plate. 3. Bent brake shoe. 4. Undersize linings. 5. Loose wheel bearing.	1-5. Repair or replace as required.
Unequal Wear on the Shoes in the Same Brake	1. Brake linings not a balanced set. 2. Sticking wheel cylinder piston.	1-2. Repair or replace as required.
Material at the Center of the Shoe Excessively Thin	1. Undersize linings. 2. Oversize drum.	1-2. Repair or replace as required.
Lining Tapered across the Width	1. Bell-mouthed drum. 2. Bent shoe. 3. Distorted mounting plate.	1-3. Repair or replace as required.
Lining Worn at One End	Bent mounting plate.	Repair or replace as required.
Linings Glazed	1. Grease on lining. 2. Wrong type lining for service involved.	1-2. Repair or replace as required.
Rivets Tear Loose	1. Improper set rivet. 2. Improper setting of the rivet. 3. Enlarged rivet holes in the shoe.	1-3. Repair or replace as required.
Unequal Wear Opposite Brakes, Same Axle	1. Weak shoe return spring. 2. Obstructed hydraulic line. 3. Stuck wheel cylinder piston. 4. Brake drum surface in poor condition. 5. Loose wheel bearing.	1-5. Repair or replace as required.
Linings at Scored	1. Scored drum. 2. Abrasive material between the lining and drum.	1-2. Repair or replace as required.
Cracks at Rivet Holes	1. Wrong type rivets. 2. Rivets not properly set. 3. Dirt or rust on the shoe table. 4. Wrong size lining.	1-4. Repair or replace as required.
Elongation of the Rivet Holes	1. Loose rivets. 2. Wrong size rivets.	1-2. Repair or replace as required.
Wear on the Edge of the Lining	1. Wrong width lining. 2. Holes improperly drilled. 3. Loose wheel bearing. 4. Bent shoe.	1-4. Repair or replace as required.
Groove on the Edge of the Lining	1. Lining too wide. 2. Worn drum.	1-2. Repair or replace as required.

BRAKE DRUM

PROBLEM	POSSIBLE CAUSE	CORRECTION
Brake Drum Heat Checked in Spots	1. Out-of-round brake drum. 2. Eccentric mounting of the drum. 3. Loose wheel bearing.	1-3. Repair or replace as required.
Drum Uniformly Heat Checked	1. Improper friction materials. 2. Overworked brake. 3. Driver abuse.	1-3. Repair or replace as required.
Excessive Scoring of the Drum	1. Improper friction materials. 2. Overworked brake. 3. Abrasive material between the lining and drum. 4. Soft drum. 5. Bent or warped shoe.	1-5. Repair or replace as required.
Excessive Drum Cracks	1. Drive abuse. 2. Weak drum. 3. Wrong friction material. 4. Overworked brake.	1-4. Repair or replace as required.

EXHAUST BRAKE

PROBLEM	POSSIBLE CAUSE	CORRECTION
Exhaust Brake does not Operate	1. Blown fuse. 2. Improperly adjusted or faulty accelerator or clutch switches. 3. Poor connections or corroded terminals at switches or control valve. 4. Improperly adjusted or seized exhaust brake valve. 5. Vacuum lines kinked, restricted, or plugged with ice. 6. Seized vacuum chamber. 7. Valve linkage broken. 8. Chamber or control valve jammed with ice. 9. Faulty control valve. Valve should open when approximate battery(s) voltage is applied to terminals. 10. Faulty vacuum chamber. 11. Broken wire in wiring harness.	1. Replace. 2. Adjust or replace. 3. Clean or replace. 4. Adjust, or repair. 5. Repair. 6. Repair. 7. Repair. 8. Melt ice, Drain lines of water. 9. Replace. 10. Replace. 11. Repair.
Exhaust Brake Slow to Operate	1. Tighten exhaust brake valve or linkage. 2. Improperly adjsuted accelerator or clutch switches.	1. Free up and lubricate. 2. Adjust.
Weak Braking Action	1. Improperly adjusted or tight exhaust brake valve. 2. Tight linkage. 3. Vacuum lines kinked or partially plugged with ice. 4. Leaking fittings at vacuum lines. 5. Leaky vacuum chamber.	1. Free up and/or adjust. Lubricate as needed. 2. Free up and lubricate. 3. Repair. 4. Tighten. 5. Replace.
Exhaust Brake will not Shut Off (Exhaust Brake Control Switch "Off")	1. Seized exhaust brake valve or linkage. 2. Control valve or chamber jammed with ice. 3. Short in wiring harness (approximate battery(s) voltage at control solenoid regardless of control switch position. 4. Faulty control switch.	1. Free up and lubricate. 2. Melt ice and drain lines. 3. Repair. 4. Replace.
Exhaust Brake "On Continuously when Exhaust Brake Control Switch is "On" (not Controlled by Clutch or Accelerator Switches)	1. Improperly adjusted clutch or accelerator switches. 2. Switches improperly wired. 3. Short in wiring harness.	1. Adjust. 2. Check wiring against wiring diagram. Repair as needed. 3. Repair.
Engine Overheats or Loses Power	1. Engine brake valve stuck partially closed. 2. Engine brake valve adjusted so that it is partially closed.	1. Free up and lubricate or replace. 2. Adjust.

PARKING BRAKES

INSUFFICIENT BRAKING FORCE

PROBLEM	POSSIBLE CAUSE	CORRECTION
Brake lining and drum clearance	Clearance between the brake lining and the brake drum excessive	Adjust the brake lining and the brake drum clearance
Brake lining	Brake lining worn out	Replace the brake lining
Camshaft	Camshaft worn out	Replace the camshaft
Control wire	Control wire stretched	Adjust the control wire length or replace the control wire

HYDROMASTER

PROBLEM	POSSIBLE CAUSE	CORRECTION
Insufficient Braking Power	1. Hydraulic piston retainer deteriorated (brake fluid leakage). 2. Relay piston cup deteriorated (brake fluid leakage). 3. Air leakage from between the piston plate and the cylinder shell. 4. Clearance between the poppet valve and the body excessive.	1. Replace the hydraulic piston retainer. 2. Replace the relay piston cup. 3. Replace the piston plate rubber gasket 4. Replace the poppet valve.

MAIN DATA AND SPECIFICATIONS

MODEL DEDIGNATION (EXPLANATION ONLY)

N K R 69 E D A L — 1 D X Y E T

- **L** — CAB (CHSSSIS) APPLICATION
  - L : LEFT HAND DRIVE
  - U : RIGHT HAND DRIVE
- **A** — FRONT SUSPENSION
  - A : INDEPENDENT FRONT SUSPENSION
- **D** — SPECIAL PURPOSE CHASSIS
  - D : DUMP
  - C : REFRIGERATOR
- **E** — WHEELBASE
  - C : 2151 – 2300 mm
  - E : 2451 – 2600 mm
  - (E2 : 2460 mm)
  - G : 2751 – 2900 mm
  - L : 3351 – 3500 mm
  - P : 3801 – 3950 mm
  - R : 4101 – 4250 mm
- **69** — ENGINE MODEL
  - 55 : 4JB1
  - 58 : 4BE1
  - 59 : 4BD1
  - 65 : 4BD2-TC (WITH INTERCOOLER TURBOCHARGED)
  - 66 : 4HF1
  - 69 : 4JG2
  - 70 : 4HE1-TC (WITH INTERCOOLER TURBOCHARGED)
  - 71 : 4HG1
- **R** — DRIVING SYSTEM
  - R : 4 x 2
  - S : 4 x 4
- **K** — G.V.M. RANGE
  - H : 2.5 – 3.5 ton
  - K : 3.3 – 5.5 ton
  - P : 5.0 – 7.0 ton
  - Q (1) : 6.0 – 8.5 ton
- **N** — MODEL LINE
  - N : LIGHT DUTY FORWARD CONTROL TRUCK
- **T** — CHASSIS APPLICATION
  - T : AUTOMATIC TRANSMISSION
  - J : TURBOCHARGER
- **E** — DESTINATION
  - B : EGYPT
  - C : CHINA
  - CL : COLMBIA
  - E : EUROPE
  - G : TURKEY
  - H : AUSTRALIA
  - IN : INDONESIA
  - K : HONGKONG
  - ME : E MALAYSIA
  - MW : W MALAYSIA
  - P : THAILAND
  - R : TAIWAN
  - S : G. C. C.
  - SN : SYNGAPORE
  - V : NEW ZEALAND
  - Z : SOUTH AFRICA
- **Y** — CHASSIS OR REAR BODY CONFIGURATON
  - Y : CAB CHASSIS
  - A : DROP SIDE REAR BODY (WOOD)
  - B : DROP SIDE REAR BODY (STEEL)
  - S : LOW BED STEEL REAR BODY
  - D : DUMP BODY
- **X** — CAB OR FRAME CONFIGURATION
  - W : CREW CAB
  - X : TILT CAB
  - M : KICK UP FRAME
  - V : STRAIGHT FRAME
  - C1 : REFRIGERATPR
- **D** — PAY LOAD
  - B : 1.25 ton
  - C : 1.5ton
  - D : 1.75 ton
  - E : 2.0 ton
  - G : 2.5 ton
  - H : 2.75 ton
  - J : 3.0 ton
  - L : 3.5 ton
  - N : 4.0 ton
- **1** — REAR TYRE
  - 1 : SINGLE TIRE
  - 3 : SMALL DUAL TIRE (LOW BED SERIES)
  - 5 : DUAL TIRE

FRONT BRAKES (NHR 1994 – 1997)

—	Not available
○	Standard
△	Factory option
	Non

		FRONT BRAKE																					
		DISC BRAKE								DRUM BRAKE													
		WHEEL CYL.		DISC				PAD		Type		WHEEL CYL.			DRUM			LINING					
		Inside dia. (in)		Thickness (mm)		Outside dia. (mm)		Thickness (mm)		2L	D2L	Inside dia. (in)			Inside dia. (mm)			Thickness (mm)			Width (mm)		
		2 + 1/8	2	30	35	265	282	12.0	14.0			1 + 1/8	1 + 1/16	1 + 3/16	279.4	300	320	6.0	9.6	11.0	60	75	100
No.	Models	1	2	3	4	5	6	7	8	9	10	11	12	13	14	15	16	17	18	19	20	21	22
1	NHR55EU -1CB		–	–		–		–		○		○			○			○			○		
2	NHR55EU -1CY		–	–		–		–		○		○			○			○			○		
3	NHR55EU -1CYIN		–	–		–		–		○		○			○			○			○		
4	NHR55EU -ICYMW		–	–		–		–		○		○			○			○			○		
5	NHR55EU -1CYZ		–	–		–		–		○		○			○			○			○		
6	NHR55EAU-1CBK		○	○		○		○		–		–			–			–			–		
7	NHR55EAU-1CYK		○	○		○		○		–		–			–			–			–		
6a	NHR55EU -1CBK		–	–		–		–		○		○			○			○			○		
7a	NHR55EU -1CYK		–	–		–		–		○		○			○			○			○		
8	NHR55EU -3CB		–	–		–		–		○		○			○			○			○		
9	NHR55EU -3CBSN		–	–		–		–		○		○			○			○			○		
10	NHR55EAU-3CBK		○	○		○		○		–		–			–			–			–		
10a	NHR55EU -3CBK		–	–		–		–		○		○			○			○			○		
11	NHR55EU -1BWS		–	–		–		–		○		○			○			○			○		
12	NHR55EU -1BWSSK		–	–		–		–		○		○			○			○			○		
13	NHR55EAU-1BWSK		○	○		○		○		–		–			–			–			–		
13a	NHR55EU -1BWSK		–	–		–		–		○		○			○			○			○		
14	NHR55EL -1CBS		–	–		–		–		○		○			○			○			○		
15	NHR55EL -1CY		–	–		–		–		○		○			○			○			○		
16	NHR55EAL -1CBC		○	○		○		○		–		–			–			–			–		
17	NHR55EL -3CB		–	–		–		–		○		○			○			○			○		
18	NHP55EL -1BWS		–	–		–		–		○		○			○			○			○		
19	NHR55EL -1BWSS		–	–		–		–		○		○			○			○			○		
20	NHR55EAL -1BWSC		○	○		○		○		–		–			–			–			–		

REAR BRAKES (NHR 1994 – 1997)

—	Not available
○	Standard
△	Factory option
	Non

		REAR BRAKE																	PARKING BRAKE				BRAKE CONTROL					
		DRUM BRAKE																										
		TYPE		WHEEL CYL.				DRUM				LINING							DRUM		LINING		MASTER CYL.					
				Inside dia. (in)				Inside dia. (mm)				Thickness (mm)				Width (mm)			Inside dia. (mm)		Width (mm)		Inside dia. (in)					
		D2L (W/O AUTO)	D2L (W AUTO)	7/8	1	1+3/16	1+5/16	228.6	279.4	300	320	4.9	6.0	9.6	11.0	60	75	100	178	190	35	45	1+1/16	1+1/8	1+1/4	DSPV	LSPV	EBXRHAKUEST
No.	Models	1	2	3	4	5	6	7	8	9	10	11	12	13	14	15	16	17	18	19	20	21	22	23	24	25	26	27
1	NHR55EU -1CB	○	–	○				–	○			–	○			○	–		○		○		○			△		△
2	NHR55EU -1CY	○	–	○				–	○			–	○			○	–		○		○		○			–		△
3	NHR55EU -1CYIN	○	–	○				–	○			–	○			○	–		○		○		○			–		△
4	NHR55EU -1CYMW	○	–	○				–	○			–	○			○	–		○		○		○			△		△
5	NHR55EU -1CYZ	○	–	○				–	○			–	○			○	–		○		○		○			○		△
6	NHR55EAU-1CBK	–	○	○				–	○			–	○			○	–		○		○		○			△		△
7	NHR55EAU-1CYK	–	○	○				–	○			–	○			○	–		○		○		○			–		△
6a	NHR55EU -1CBK	○	–	○				–	○			–	○			○	–		○		○		○			△		△
7a	NHR55EU -1CYK	○	–	○				–	○			–	○			○	–		○		○		○			–		△
8	NHR55EU -3CB	○	–	○				○	–			○	–			–	○		○		○		○			△		△
9	NHR55EU -3CBSN	○	–	○				○	–			○	–			–	○		○		○		○			△		△
10	NHR55EAU-3CBK	–	○	○				○	–			○	–			–	○		○		○		○			△		△
10a	NHR55EU -3CBK	○	–	○				○	–			○	–			–	○		○		○		○			△		△
11	NHR55EU -1BWS	○	–	○				–	○			–	○			○	–		○		○		○			△		△
12	NHR55EU -1BWSSN	○	–	○				–	○			–	○			○	–		○		○		○			△		△
13	NHR55EAU-1BWSK	–	○	○				–	○			–	○			○	–		○		○		○			△		△
13a	NHR55EU -1BWSK	○	–	○				–	○			–	○			○	–		○		○		○			△		△
14	NHR55EL -1CBS	○	–	○				–	○			–	○			○	–		○		○		○			△		△
15	NHR55EL -1CY	○	–	○				–	○			–	○			○	–		○		○		○			–		△
16	NHR55EAL -1CBC	–	○	○				–	○			–	○			○	–		○		○		○			○		○
17	NHR55EL -3CB	○	–	○				○	–			○	–			–	○		○		○		○			△		△
18	NHR55EL -1BWS	○	–	○				–	○			–	○			○	–		○		○		○			△		△
19	NHR55EL -1BWSS	○	–	○				–	○			–	○			○	–		○		○		○			△		△
20	NHR55EAL -1BWSC	–	○	○				–	○			–	○			○	–		○		○		○			○		△

FRONT BRAKES (NHR 1998)

—	Not available
○	Standard
△	Factory option
	Non

		FRONT BRAKE																									
		DISC BRAKE										DRUM BRAKE															
		WHEEL CYL.			DISC					PAD		Type		WHEEL CYL.				DRUM			LINING						
		Inside dia. (in)			Thickness (mm)		Outside dia. (mm)			Thickness (mm)		2L	D2L	Inside dia. (in)				Inside dia. (mm)			Thickness (mm)			Width (mm)			
		2 + 1/8	2 + 2	2 + 1/4	35	42	265	282	310	14.0	13.0			1 + 1/8	1 + 3/16	1 + 5/16	1 + 3/8	279.4	300	320	6.9	9.6	11.0	60	75	100	120
No.	Models	1	2	3	4	5	6	7	8	9	10	11	12	13	14	15	16	17	18	19	20	21	22	23	24	25	26
1	NHR55EU -1CB											○		○				○			○			○			
2	NHR55EU -1CY											○		○				○			○			○			
3	NHR55EU -1CYIN											○		○				○			○			○			
4	NHR69EU -1CBK											○		○				○			○			○			
5	NHR69EU -1CYK											○		○				○			○			○			
6	NHR55EU -1BWS											○		○				○			○			○			
7	NHR55EU -1BWSSN											○		○				○			○			○			
8	NHR69EU -1BWSK											○		○				○			○			○			
9	NHR55EU -3CB											○		○				○			○			○			
10	NHR55EU -3CBSN											○		○				○			○			○			
11	NHR69EU -3CBK											○		○				○			○			○			
12	NHR55EL -1CBS											○		○				○			○			○			
13	NHR55EL -1CY											○		○				○			○			○			
14	NHR55EL -1BWS											○		○				○			○			○			
16	NHR55EL -3CB											○		○				○			○			○			

REAR BRAKES (NHR 1998)

—	Not available
○	Standard
△	Factory option
	Non

		REAR BRAKE																			PARKING BRAKE								BRAKE CONTROL								
		DRUM BRAKE																																			
		TYPE		WHEEL CYL.					DRUM				LINING								DRUM.				LINING				MASTER CYL.								
				Inside dia. (in)					Inside dia. (mm)				Thickness (mm)				Width (mm)				Inside dia. (mm)				Width (mm)				Inside dia. (in)								
		D2L (W/O AUTO)	D2L (W AUTO)	7/8	1	1+3/16	1+5/16	1+3/8	228.6	279.4	300	320	4.9	6.0	9.6	11.0	60	75	100	120	178	190	203	254	35	45	50	60	1+1/16	1+1/8	1+1/4	1+3/8	DSPV	LSPV	EXHAUST BRAKE	HYDROMASTER	HBB
No.	Models	1	2	3	4	5	6	7	8	9	10	11	12	13	14	15	16	17	18	19	20	21	22	23	24	25	26	27	28	29	30	31	32	33	34	35	36
1	NHR55EU -1CB	○	—	○					—	○							○	—			○				○				○				△		△		
2	NHR55EU -1CY	○	—	○					—	○							○	—			○				○				○				—		△		
3	NHR55EU -1CYIN	○	—	○					—	○							○	—			○				○				○				—		△		
4	NHR69EU -1CBK	○	—	○					—	○							○	—			○				○				○				△		△		
5	NHR69EU -1CYK	○	—	○					—	○							○	—			○				○				○				—		△		
6	NHR55EU -1BWS	○	—	○					—	○							○	—			○				○				○				△		△		
7	NHR55EU -1BWSSN	○	—	○					—	○							○	—			○				○				○				△		△		
8	NHR69EU -1BWSK	○	—	○					—	○							○	—			○				○				○				△		△		
9	NHR55EU -3CB	○	—	○					○	—							—	○			○				○				○				△		△		
10	NHR55EU -3CBSN	○	—	○					○	—							—	○			○				○				○				△		△		
11	NHR69EU -3CBK	○	—	○					○	—							—	○			○				○				○				△		△		
12	NHR55EL -1CBS	○	—	○					—	○							○	—			○				○				○				△		△		
13	NHR55EL -1CY	○	—	○					—	○							○	—			○				○				○				—		△		
14	NHR55EL -1BWS	○	—	○					—	○							○	—			○				○				○				△		△		
16	NHR55EL -3CB	○	—	○					○	—							—	○			○				○				○				△		△		

FRONT BRAKES (NKR 1994 – 1997)

—	Not available
○	Standard
△	Factory option
	Non

		FRONT BRAKE																					
		DISC BRAKE								DRUM BRAKE													
		WHEEL CYL.		DISC				PAD		Type		WHEEL CYL.			DRUM			LINING					
		Inside dia. (in)		Thickness (mm)		Outside dia. (mm)		Thickness (mm)		2 L	D 2 L	Inside dia. (in)			Inside dia. (mm)			Thickness (mm)			Width (mm)		
		2 + 1 / 8	2	30	35	265	282	12.0	14.0			1 + 1 / 8	1 + 1 / 16	1 + 3 / 16	279.4	300	320	6.0	9.6	11.0	60	75	100
No.	Models	1	2	3	4	5	6	7	8	9	10	11	12	13	14	15	16	17	18	19	20	21	22
1	NKR55EU -1EY		–		–	–	–		–	○	–	○	–			○	–	○	–			○	
2	NKR55EU -1EYV		–		–	–	–		–	○	–	○	–			○	–	○	–			○	
3	NKR55EU -1EA		–		–	–	–		–	○	–	○	–			○	–	○	–			○	
4	NKR55EU -1EXYP		–		–	–	–		–	○	–	○	–			○	–	○	–			○	
5	NKR58EU -1EXY		–		–	–	–		–	○	–	○	–			○	–	○	–			○	
6	NKR58EU -1EXA		–		–	–	–		–	○	–	○	–			○	–	○	–			○	
7a	NKR58EU -1EXYH		–		–	–	–		–	○	–	○	–			○	–	○	–			○	
8	NKR55E2U -5HY		–		–	–	–		–	○	–	○	–			○	–	○	–			○	
9	NKR55E2U -5HYK		–		–	–	–		–	○	–	○	–			○	–	○	–			○	
9a	NKR55E2U -5HXYP		–		–	–	–		–	○	–	○	–			○	–	○	–			○	
10	NKR58E2U -5HY		–		–	–	–		–	○	–	○	–			○	–	○	–			○	
11	NKR58E2U -5HYV		–		–	–	–		–	○	–	○	–			○	–	○	–			○	
12	NKR58E2U -5HXY		–		–	–	–		–	○	–	○	–			○	–	○	–			○	
13	NKR58E2U -5HXC1Y		–		–	–	–		–	○	–	○	–			○	–	○	–			○	
14	NKR58E2U -5HXYP		–		–	–	–		–	○	–	○	–			○	–	○	–			○	
14a	NKR58E2U -5EXYH		–		–	–	–		–	○	–	○	–			○	–	○	–			○	
15	NKR58EDU-5EMXD		–		–	–	–		–	–	○	○	–			○	–	○	–			○	
16	NKR58EDU-5EMXDY		–		–	–	–		–	–	○	○	–			○	–	○	–			○	
17	NKR17LU -5HXYZ		–		–	–	–		–	○	–	○		–		○	–	○	–			○	
18	NKR55LU -5HY		–		–	–	–		–	○	–	○		–		○	–	○	–			○	
19	NKR55LU -5HXY		–		–	–	–		–	○	–	○		–		○	–	○	–			○	
20	NKR55LU -5HA		–		–	–	–		–	○	–	○		–		○	–	○	–			○	
21	NKR55LU -5HXA		–		–	–	–		–	○	–	○		–		○	–	○	–			○	
22	NKR55LU -5HYK		–		–	–	–		–	○	–	○		–		○	–	○	–			○	

REAR BRAKES (NKR N1994 – 1997)

—	Not available
○	Standard
△	Factory option
	Non

		REAR BRAKE																	PARKING BRAKE				BRAKE CONTROL					
		DRUM BRAKE																										
		TYPE		WHEEL CYL.				DRUM				LINING							DRUM		LINING		MASTER CYL.					
				Inside dia. (in)				Inside dia. (mm)				Thickness (mm)				Width (mm)			Inside dia. (mm)		Width (mm)		Inside dia. (in)					
		D2L (W/O AUTO)	D2L (W AUTO)	7/8	1	1+3/16	1+5/16	228.6	279.4	300	320	4.9	6.0	9.6	11.0	60	75	100	178	190	35	45	1+1/16	1+1/8	1+1/4	DSPV	LSPV	EBXRHAKUEST
No.	Models	1	2	3	4	5	6	7	8	9	10	11	12	13	14	15	16	17	18	19	20	21	22	23	24	25	26	27
1	NKR55EU -1EY	○	–	○	–	–		–		○	–	–	○	–			○		○	–	○	–		○		–	–	△
2	NKR55EU -1EYV	○	–	○	–	–		–		○	–	–	○	–			○		○	–	○	–		○		–	–	△
3	NKR55EU -1EA	○	–	○	△	–		–		○	–	–	○	–			○		○	–	○	–		○		△	–	△
4	NKR55EU -1EXYP	○	–	○	–	–		–		○	–	–	○	–			○		○	–	○	–		○		–	–	△
5	NKR58EU -1EXY	○	–	○	–	–		–		○	–	–	○	–			○		–	○	–	○		○		–	–	△
6	NKR58EU -1EXA	○	–	○	△	–		–		○	–	–	○	–			○		–	○	–	○		○		△	–	△
7a	NKR58EU -1EXYH	○	–	–	○	–		–		○	–	–	○	–			○		–	○	–	○		○		–	○	△
8	NKR55E2U -5HY	○	–	–	○	–		–		○	–	–	○	–			○		○	–	○	–		○		–	–	△
9	NKR55E2U -5HYK	○	–	–	○	–		–		○	–	–	○	–			○		○	–	○	–		○		–	–	△
9a	NKR55E2U -5HXYP	○	–	–	○	–		–		○	–	–	○	–			○		○	–	○	–		○		–	–	△
10	NKR58E2U -5HY	○	–	–	○	–		–		○	–	–	○	–			○		–	○	–	○		○		–	–	△
11	NKR58E2U -5HYV	○	–	–	○	–		–		○	–	–	○	–			○		–	○	–	○		○		–	–	△
12	NKR58E2U -5HXY	○	–	–	○	–		–		○	–	–	○	–			○		–	○	–	○		○		–	–	△
13	NKR58E2U -5HXC1Y	○	–	–	○	–		–		○	–	–	○	–			○		–	○	–	○		○		–	–	△
14	NKR58E2U -5HXYP	○	–	–	○	–		–		○	–	–	○	–			○		–	○	–	○		○		–	–	△
14a	NKR58E2U -5EXYH	○	–	–	○	–		–		○	–	–	○	–			○		–	○	–	○		○		–	○	△
15	NKR58EDU -5EMXD	○	–	–	○	–		–		○	–	–	○	–			○		–	○	–	○		○		–	–	△
16	NKR58EDU -5EMXDY	○	–	–	○	–		–		○	–	–	○	–			○		–	○	–	○		○		–	–	△
17	NKR17LU -5HXYZ	○	–	–	○	–		–		○	–	–	○	–			○		○	–	○	–		○		○	–	–
18	NKR55LU -5HY	○	–	–	○	–		–		○	–	–	○	–			○		○	–	○	–		○		–	–	△
19	NKR55LU -5HXY	○	–	–	○	–		–		○	–	–	○	–			○		○	–	○	–		○		–	–	△
20	NKR55LU -5HA	○	–	–	○	–		–		○	–	–	○	–			○		○	–	○	–		○		–	–	△
21	NKR55LU -5HXA	○	–	–	○	–		–		○	–	–	○	–			○		○	–	○	–		○		–	–	△
22	NKR55LU -5HYK	○	–	–	○	–		–		○	–	–	○	–			○		○	–	○	–		○		–	–	△

FRONT BRAKES (NKR 1994 – 1997)

—	Not available
○	Standard
△	Factory option
	Non

		FRONT BRAKE																					
		DISC BRAKE								DRUM BRAKE													
		WHEEL CYL.		DISC				PAD		Type		WHEEL CYL.			DRUM			LINING					
		Inside dia. (in)		Thickness (mm)		Outside dia. (mm)		Thickness (mm)		2L	D2L	Inside dia. (in)			Inside dia. (mm)			Thickness (mm)			Width (mm)		
		2+1/8	2	30	35	265	282	12.0	14.0			1+1/8	1+1/16	1+3/16	279.4	300	320	6.0	9.6	11.0	60	75	100
No.	Models	1	2	3	4	5	6	7	8	9	10	11	12	13	14	15	16	17	18	19	20	21	22
23	NKR58LU -5HXY		–		–	–	–		–	○	–	○		–		○	–	○	–			○	
24	NKR58LU -5HYV		–		–	–	–		–	○	–	○		–		○	–	○	–			○	
25	NKR58LU -5HA		–		–	–	–		–	○	–	○		–		○	–	○	–			○	
26	NKR58LU -5HXA		–		–	–	–		–	○	–	○		–		○	–	○	–			○	
27	NKR58LU -5HXYMW		–		–	–	–		–	○	–	○		–		○	–	○	–			○	
28	NKR58LU -5HXYP		–		–	–	–		–	○	–	○		–		○	–	○	–			○	
29	NKR58LU -5HXYIN		–		–	–	–		–	○	–	○		–		○	–	○	–			○	
30	NKR66LU -5LXYIN		–		–	–	–		–	–	○	–		○		–	○	–	○			○	
31	NKR55EU -3EXY		–		–	–	–		–	○	–	○		–		○	–	○	–			○	
32a	NKR58EU -3EXYH		–		–	–	–		–	○	–	○		–		○	–	○	–			○	
33	NKR55EU -1DWY		–		–	–	–		–	○	–	○				○	–	○	–			○	
34	NKR55EU -1DWYV		–		–	–	–		–	○	–	○				○	–	○	–			○	
35	NKR55EU -1DWS		–		–	–	–		–	○	–	○				○	–	○	–			○	
36	NKR55LU -5GWYK		–		–	–	–		–	○	–	○				○	–	○	–			○	
37	NKR58LU -5GWY		–		–	–	–		–	○	–	○				○	–	○	–			○	
38	NKR58LU -5GWYV		–		–	–	–		–	○	–	○				○	–	○	–			○	
39	NKR55EL -1EY		–		–	–	–		–	○	–	○				○	–	○	–			○	
40	NKR55EL -1EXY		–		–	–	–		–	○	–	○				○	–	○	–			○	
41	NKR55EL -1EA		–		–	–	–		–	○	–	○				○	–	○	–			○	
41a	NKR55EL -1EXYG		–		–	–	–		–	○	–	○				○	–	○	–			○	
42	NKR55EL -1EAC		–		–	–	–		–	○	–	○				○	–	○	–			○	
42a	NKR55EL -1EXAC		–		–	–	–		–	○	–	○				○	–	○	–			○	
43	NKR55EAL-1EYB		○		○	○	–		○	–	–	–				–	–	–	–			–	
44	NKR58EL -1EY		–		–	–	–		–	○	–	○				○	–	○	–			○	

REAR BRAKES (NKR 1994 – 1997)

—	Not available
○	Standard
△	Factory option
	Non

		REAR BRAKE																	PARKING BRAKE				BRAKE CONTROL					
		DRUM BRAKE																										
		TYPE		WHEEL CYL.				DRUM				LINING							DRUM		LINING		MASTER CYL.					
				Inside dia. (in)				Inside dia. (mm)				Thickness (mm)				Width (mm)			Inside dia. (mm)		Width (mm)		Inside dia. (in)					
		D2L (W/O AUTO)	D2L (W AUTO)	7/8	1	1+3/16	1+5/16	228.6	279.4	300	320	4.9	6.0	9.6	11.0	60	75	100	178	190	35	45	1+1/16	1+1/8	1+1/4	DSPV	LSPV	EBXRHAKUEST
No.	Models	1	2	3	4	5	6	7	8	9	10	11	12	13	14	15	16	17	18	19	20	21	22	23	24	25	26	27
23	NKR58LU -5HXY	○	–	–	○	–		–		○	–	–	○	–			○		–	○	–	○		○		–	–	△
24	NKR58LU -5HYV	○	–	–	○	–		–		○	–	–	○	–			○		–	○	–	○		○		–	–	△
25	NKR58LU -5HA	○	–	–	○	–		–		○	–	–	○	–			○		–	○	–	○		○		–	–	△
26	NKR58LU -5HXA	○	–	–	○	–		–		○	–	–	○	–			○		–	○	–	○		○		–	–	△
27	NKR58LU -5HXYMW	○	–	–	○	–		–		○	–	–	○	–			○		–	○	–	○		○		–	–	△
28	NKR58LU -5HXYP	○	–	–	○	–		–		○	–	–	○	–			○		–	○	–	○		○		–	–	△
29	NKR58LU -5HXYIN	○	–	–	○	–		–		○	–	–	○	–			○		–	○	–	○		○		–	–	△
30	NKR66LU -5LXYIN	○	–	–	–	○		–		–	○	–	–	○			○			○		○			○	–	–	△
31	NKR55EU -3EXY	○	–	–	○	–		○		–	–	○	–	–			○		○	–	○	–		○		–	–	△
32a	NKR58EU -3EXYH	○	–	–	○	–		○		–	–	○	–	–			○		–	○	–	○		○		–	○	△
33	NKR55EU -1DWY	○	–	○	–	–		–		○	–	–	○	–			○		○	–	○	–		○		–	–	△
34	NKR55EU -1DWYV	○	–	○	–	–		–		○	–	–	○	–			○		○	–	○	–		○		–	–	△
35	NKR55EU -1DWS	○	–	○	△	–		–		○	–	–	○	–			○		○	–	○	–		○		△	–	△
36	NKR55LU -5GWYK	○	–	–	○	–		–		○	–	–	○	–			○		○	–	○	–		○		–	–	△
37	NKR58LU -5GWY	○	–	–	○	–		–		○	–	–	○	–			○		–	○	–	○		○		–	–	△
38	NKR58LU -5GWYV	○	–	–	○	–		–		○	–	–	○	–			○		–	○	–	○		○		–	–	△
39	NKR55EL -1EY	○	–	○	–	–		–		○	–	–	○	–			○		○	–	○	–		○		–	–	△
40	NKR55EL -1EXY	○	–	○	–	–		–		○	–	–	○	–			○		○	–	○	–		○		–	–	△
41	NKR55EL -1EA	○	–	○	△	–		–		○	–	–	○	–			○		○	–	○	–		○		△	–	△
41a	NKR55EL -1EXYG	○	–	○	–	–		–		○	–	–	○	–			○		○	–	○	–		○		–	–	△
42	NKR55EL -1EAC	○	–	–	○	–		–		○	–	–	○	–			○		○	–	○	–		○		○	–	△
42a	NKR55EL -1EXAC	○	–	–	○	–		–		○	–	–	○	–			○		○	–	○	–		○		○	–	△
43	NKR55EAL -1EYB	–	○	○	–	–		–		○	–	–	○	–			○		○	–	○	–		○		–	–	△
44	NKR58EL -1EY	○	–	○	–	–		–		○	–	–	○	–			○		–	○	–	○		○		–	–	△

FRONT BRAKES (NKR 1994 – 1997)

—	Not available
○	Standard
△	Factory option
	Non

		FRONT BRAKE																					
		DISC BRAKE								DRUM BRAKE													
		WHEEL CYL.		DISC				PAD		Type		WHEEL CYL.			DRUM			LINING					
		Inside dia. (in)		Thickness (mm)		Outside dia. (mm)		Thickness (mm)		2 L	D 2 L	Inside dia. (in)			Inside dia. (mm)			Thickness (mm)			Width (mm)		
		2 + 1 / 8	2	30	35	265	282	12.0	14.0			1 + 1 / 8	1 + 1 / 16	1 + 3 / 16	279.4	300	320	6.0	9.6	11.0	60	75	100
No.	Models	1	2	3	4	5	6	7	8	9	10	11	12	13	14	15	16	17	18	19	20	21	22
45	NKR58EL -1EXY		–		–	–	–		–	○	–	○				○	–	○	–			○	
46	NKR58EL -1EXA		–		–	–	–		–	○	–	○				○	–	○	–			○	
47	NKR69EL -1EXYR		–		–	–	–		–	○	–	○				○	–	○	–			○	
48	NKR69EAL-1DXYE		○		○	○	–		○	–	–	–				–	–	–	–			–	
49	NKR55E2L-5HY		–		–	–	–		–	○	–	○	–			○	–	○	–			○	
49a	NKR55E2L-5HXYG		–		–	–	–		–	○	–	○	–			○	–	○	–			○	
50	NKR58E2L-5HY		–		–	–	–		–	○	–	○	–			○	–	○	–			○	
51	NKR58E2L-5HXY		–		–	–	–		–	○	–	○	–			○	–	○	–			○	
52	NKR58E2L-5HXA		–		–	–	–		–	○	–	○	–			○	–	○	–			○	
53	NKR58E2L-5HXYS		–		–	–	–		–	○	–	○	–			○	–	○	–			○	
53a	NKR58E2L-5HXAS		–		–	–	–		–	○	–	○	–			○	–	○	–			○	
54	NKR58E2L-5HXC1Y		–		–	–	–		–	○	–	○	–			○	–	○	–			○	
55	NKR58EDL-5EMXD		–		–	–	–		–	–	○	○	–			○	–	○	–			○	
56	NKR58EDL-5EMXDY		–		–	–	–		–	–	○	○	–			○	–	○	–			○	
57	NKR58EDL-5EMXDS		–		–	–	–		–	–	○	○	–			○	–	○	–			○	
58	NKR66E2L-5HXYR		–		–	–	–		–	○	–	○	–			–	○	–	○			○	
59	NKR55LL -5HY		–		–	–	–		–	○	–	○		–		○	–	○	–			○	
60	NKR55LL -5HA		–		–	–	–		–	○	–	○		–		○	–	○	–			○	
61	NKR55LL -5HXY		–		–	–	–		–	○	–	○		–		○	–	○	–			○	
62	NKR55LL -5HYC		–		–	–	–		–	○	–	○		–		○	–	○	–			○	
63	NKR55LL -5HAC		–		–	–	–		–	○	–	○		–		○	–	○	–			○	
62a	NKR55LL -5HXYC		–		–	–	–		–	○	–	○		–		○	–	○	–			○	
63a	NKR55LL -5HXAC		–		–	–	–		–	○	–	○		–		○	–	○	–			○	
64	NKR58LL -5HY		–		–	–	–		–	○	–	○		–		○	–	○	–			○	
65	NKR58LL -5HXY		–		–	–	–		–	○	–	○		–		○	–	○	–			○	

REAR BRAKES (NKR 1994 – 1997)

—	Not available
○	Standard
△	Factory option
	Non

		REAR BRAKE																	PARKING BRAKE				BRAKE CONTROL					
		DRUM BRAKE																										
		TYPE		WHEEL CYL.				DRUM				LINING							DRUM		LINING		MASTER CYL.					
				Inside dia. (in)				Inside dia. (mm)				Thickness (mm)				Width (mm)			Inside dia. (mm)		Width (mm)		Inside dia. (in)					
		D2L (W/O AUTO)	D2L (W AUTO)	7/8	1	1+3/16	1+5/16	228.6	279.4	300	320	4.9	6.0	9.6	11.0	60	75	100	178	190	35	45	1+1/16	1+1/8	1+1/4	DSPV	LSPV	EBXRHAKUEST
No.	Models	1	2	3	4	5	6	7	8	9	10	11	12	13	14	15	16	17	18	19	20	21	22	23	24	25	26	27
45	NKR58EL -1EXY	○	–	○	–	–		–		○	–	–	○	–			○		–	○	–	○		○		–	–	△
46	NKR58EL -1EXA	○	–	○	△	–		–		○	–	–	○	–			○		–	○	–	○		○		△	–	△
47	NKR69EL -1EXYR	○	–	○	–	–		–		○	–	–	○	–			○		○	–	○	–		○		–	–	△
48	NKR69EAL-1DXYE	–	○	–	○	–		–		○	–	–	○	–			○		○	–	○	–		○		–	○	○
49	NKR55E2L -5HY	○	–	–	○			–		○	–		○	–			○		○	–	○	–		○		–	–	△
49a	NKR55E2L -5HXYG	○	–	–	○			–		○	–		○	–			○		○	–	○	–		○		–	–	△
50	NKR58E2L -5HY	○	–	–	○			–		○	–		○	–			○		–	○	–	○		○		–	–	△
51	NKR58E2L -5HXY	○	–	–	○			–		○	–		○	–			○		–	○	–	○		○		–	–	△
52	NKR58E2L -5HXA	○	–	–	○			–		○	–		○	–			○		–	○	–	○		○		△	–	△
53	NKR58E2L -5HXYS	○	–	–	○			–		○	–		○	–			○		–	○	–	○		○		–	–	△
53a	NKR58E2L -5HXAS	○	–	–	○			–		○	–		○	–			○		–	○	–	○		○		△	–	△
54	NKR58E2L -5HXC1Y	○	–	–	○			–		○	–		○	–			○		–	○	–	○		○		–	–	△
55	NKR58EDL-5EMXD	○	–	–	○			–		○	–		○	–			○		–	○	–	○		○		–	–	△
56	NKR58EDL-5EMXDY	○	–	–	○			–		○	–		○	–			○		–	○	–	○		○		–	–	△
57	NKR58EDL-5EMXDS	○	–	–	○			–		○	–		○	–			○		–	○	–	○		○		–	–	△
58	NKR66E2L -5HXYR	○	–	–	○			–		–	○		–	○			○		–	○	–	○		○		–	–	△
59	NKR55LL -5HY	○	–	–	○			–		○	–	–	○	–			○		○	–	○	–		○		–	–	△
60	NKR55LL -5HA	○	–	–	○			–		○	–	–	○	–			○		○	–	○	–		○		–	–	△
61	NKR55LL -5HXY	○	–	–	○			–		○	–	–	○	–			○		○	–	○	–		○		–	–	△
62	NKR55LL -5HYC	○	–	–	○			–		○	–	–	○	–			○		○	–	○	–		○		–	–	○
63	NKR55LL -5HAC	○	–	–	○			–		○	–	–	○	–			○		○	–	○	–		○		–	–	○
62a	NKR55LL -5HXYC	○	–	–	○			–		○	–	–	○	–			○		○	–	○	–		○		–	–	○
63a	NKR55LL -5HXAC	○	–	–	○			–		○	–	–	○	–			○		○	–	○	–		○		–	–	○
64	NKR58LL -5HY	○	–	–	○			–		○	–	–	○	–			○		–	○	–	○		○		–	–	△
65	NKR58LL -5HXY	○	–	–	○			–		○	–	–	○	–			○		–	○	–	○		○		–	–	△

FRONT BRAKES (NKR 1994 – 1997)

—	Not available
○	Standard
△	Factory option
	Non

		FRONT BRAKE																					
		DISC BRAKE								DRUM BRAKE													
		WHEEL CYL.		DISC				PAD		Type		WHEEL CYL.			DRUM			LINING					
		Inside dia. (in)		Thickness (mm)		Outside dia. (mm)		Thickness (mm)		2 L	D 2 L	Inside dia. (in)			Inside dia. (mm)			Thickness (mm)			Width (mm)		
		2 + 1 / 8	2 .	30	35	265	282	12.0	14.0			1 + 1 / 8	1 + 1 / 16	1 + 3 / 16	279.4	300	320	6.0	9.6	11.0	60	75	100
No.	Models	1	2	3	4	5	6	7	8	9	10	11	12	13	14	15	16	17	18	19	20	21	22
66	NKR58LL -5HXA		–		–	–	–		–	○	–	○		–		○	–	○	–			○	
67	NKR58LL -5HXYS		–		–	–	–		–	○	–	○		–		○	–	○	–			○	
68	NKR58LL -5HXAS		–		–	–	–		–	○	–	○		–		○	–	○	–			○	
69	NKR66LL -5HXYR		–		–	–	–		–	○	–	○		–		–	○	–	○			○	
70	NKR66LL -5LXYC		–		–	–	–		–	–	○	–		○		–	○	–	○			○	
71	NKR69LL -5DXYE	○	–		○	–	○		○	–	–	–		–		–	–	–	–			–	
72	NKR69LL -5HXYE	○	–		○	–	○		○	–	–	–		–		–	–	–	–			–	
73	NKR55EL -3EXY		–		–	–	–		–	○	–	○				○		○				○	
74	NKR69EL -3EXYR		–		–	–	–		–	○	–	○				○		○				○	
75	NKR55EL -1DWY		–		–	–	–		–	○	–	○				○	–	○	–			○	
76	NKR55EL -1DWS		–		–	–	–		–	○	–	○				○	–	○	–			○	
77	NKR55EL -1DWSC		–		–	–	–		–	○	–	○				○	–	○	–			○	
78	NKR58LL -5GWY		–		–	–	–		–	○	–	○				○	–	○				○	
79	NKR58LL -5GWYC		–		–	–	–		–	○	–	○				○	–	○				○	

REAR BRAKES (NKR 1994 – 1997)

—	Not available
○	Standard
△	Factory option
	Non

		REAR BRAKE																	PARKING BRAKE				BRAKE CONTROL					
		DRUM BRAKE																										
		TYPE		WHEEL CYL.				DRUM				LINING							DRUM		LINING		MASTER CYL.					
				Inside dia. (in)				Inside dia. (mm)				Thickness (mm)				Width (mm)			Inside dia. (mm)		Width (mm)		Inside dia. (in)					
		D2L (W/O AUTO)	D2L (W AUTO)	7/8	1	1+3/16	1+5/16	228.6	279.4	300	320	4.9	6.0	9.6	11.0	60	75	100	178	190	35	45	1+1/16	1+1/8	1+1/4	DSPV	LSPV	EBXRHAKUEST
No.	Models	1	2	3	4	5	6	7	8	9	10	11	12	13	14	15	16	17	18	19	20	21	22	23	24	25	26	27
66	NKR58LL -5HXA	○	–	–	○			–		○	–	–	○	–			○		–	○	–	○		○		–	–	△
67	NKR58LL -5HXYS	○	–	–	○			–		○	–	–	○	–			○		–	○	–	○		○		–	–	△
68	NKR58LL -5HXAS	○	–	–	○			–		○	–	–	○	–			○		–	○	–	○		○		–	–	△
69	NKR66LL -5HXYR	○	–	–	○			–		–	○	–	–	○			○		–	○	–	○		○		–	–	△
70	NKR66LL -5LXYC	○	–	–	○			–		–	○	–	–	○			○		–	○	–	○			○	–	–	○
71	NKR69LL -5DXYE	–	○	–	○			–		–	○	–	–	○			○		○	–	○	–		○		–	○	○
72	NKR69LL -5HXYE	–	○	–	○			–		–	○	–	–	○			○		○	–	○	–		○		–	○	○
73	NKR55EL -3EXY	○	–	–	○			○		–	–	○	–	–			○		○	–	○	–		○		–	–	△
74	NKR69EL -3EXYR	○	–	–	○			○		–	–	○	–	–			○		○	–	○	–		○		–	–	△
75	NKR55EL -1DWY	○	–	○	–			–		○	–	–	○	–			○		○	–	○	–		○		–	–	△
76	NKR55EL -1DWS	○	–	○	△			–		○	–	–	○	–			○		○	–	○	–		○		△	–	△
77	NKR55EL -1DWSC	○	–	–	○			–		○	–	–	○	–			○		○	–	○	–		○		○	–	△
78	NKR58LL -5GWY	○	–	–	○			–		○	–	–	○	–			○		–	○	–	○		○		–	–	△
79	NKR58LL -5GWYC	○	–	–	○			–		○	–	–	○	–			○		–	○	–	○		○		–	–	○

FRONT BRAKES (NKR 1998)

—	Not available
○	Standard
△	Factory option
	Non

		FRONT BRAKE																									
		DISC BRAKE										DRUM BRAKE															
		WHEEL CYL.			DISC					PAD		Type		WHEEL CYL.				DRUM			LINING						
		Inside dia. (in)			Thickness (mm)		Outside dia. (mm)			Thickness (mm)		2L	D2L	Inside dia. (in)				Inside dia. (mm)			Thickness (mm)			Width (mm)			
		2+1/8	2+2	2+1/4	35	42	265	282	310	14.0	13.0			1+1/8	1+3/16	1+5/16	1+3/8	279.4	300	320	6.9	9.6	11.0	60	75	100	120
No.	Models	1	2	3	4	5	6	7	8	9	10	11	12	13	14	15	16	17	18	19	20	21	22	23	24	25	26
1	NKR55EU -1EXY						—	○	○	—					○	—	○		—		—	—		—		—	
2	NKR55EU -1EXA						—	○	—	○				—	○	—	○		—		—	—		—		—	
3	NKR55EU -1EXYP						○	—	○	—				○	—	—	○		—		—	—		—		—	
4	NKR58EU -1EXY						○	—	○	—				○	—	—	○		—		—	—		—		—	
5	NKR55EU -1EXYJ						○	—	○	—				—	○	—	○		—		—	—		—		—	
6	NKR66EU -1EXYH						—	○	—	○				—	○	—	○		—		—	—		—		—	
7	NKR69EAL-1DXYUK						—	○	—	○				—	○	—	○		—		—	—		—		—	
8	NKR55E2U-5HXY						—	○	—	○				—	○	—	○		—		—	—		—		—	
9	NKR69E2U-5HYK						—	○	—	○				—	○	—	○		—		—	—		—		—	
10	NKR55E2U-5HXYP						—	○	—	○				—	○	—	○		—		—	—		—		—	
12	NKR58E2U-5HXY						—	○	—	○				—	○	—	○		—		—	—		—		—	
15	NKR66E2U-5EXYH						—	○	—	○				—	○	—	○		—		—	—		—		—	
16	NKR58EDL-5EMXD						—	○	—	○					○	○	—		—		—	—		—		—	
17	NKR55LU -5HXYZJ						—	○	○	—					○	—	○		—		—	—		—		—	
18	NKR55LU -5HXYJ						—	○	—	○					○	—	○		—		—	—		—		—	
19	NKR55LU -5HXY						—	○	—	○					○	—	○		—		—	—		—		—	
20	NKR55LU -5HXA						—	○	—	○					○	—	○		—		—	—		—		—	
21	NKR69LU -5HYK						—	○	—	○					○	—	○		—		—	—		—		—	
22	NKR58LU -5HXY						—	—	—	—					—	—	—		○		—	○		○		○	
24	NKR58LU -5HXA						—	○	—	○					○	—	○		—		—	—		—		—	
25	NKR58LU -5HYIN						—	○	—	○					○	—	○		—		—	—		—		—	
26	NKR66LU -5LXYP						—	○	—	○					○	—	○		—		—	—		—		—	
27	NKR66LU -5LYIN						—	○	—	○					○	—	○		—		—	—		—		—	
28	NKR55EU -3EXY						—	○	—	○					○	—	○		—		—	—		—		—	

REAR BRAKES (NKR 1998)

—	Not available
○	Standard
△	Factory option
	Non

		REAR BRAKE																				PARKING BRAKE								BRAKE CONTROL								
		DRUM BRAKE																																				
		TYPE		WHEEL CYL.					DRUM				LINING									DRUM				LINING				MASTER CYL.								
				Inside dia. (in)					Inside dia. (mm)				Thickness (mm)				Width (mm)				Inside dia. (mm)				Width (mm)				Inside dia. (in)								
		D2L (W/O AUTO)	D2L (W AUTO)	7/8	1	1+3/16	1+5/16	1+3/8	228.6	279.4	300	320	4.9	6.0	9.6	11.0	60	75	100	120	178	190	203	254	35	45	50	60	1+1/16	1+1/8	1+1/4	1+3/8	DSPV	LSPV	EXHAUST BRAKE	HYDROMASTER	HBB
No.	Models	1	2	3	4	5	6	7	8	9	10	11	12	13	14	15	16	17	18	19	20	21	22	23	24	25	26	27	28	29	30	31	32	33	34	35	36
1	NKR55EU -1EXY	○	—	○	—	—			—		○	—	—	○	—			○			○	—			○	—				○			—	—	△		
2	NKR55EU -1EXA	○	—	—	○	—			—		○	—	—	○	—			○			○	—			○	—				○			△	—	△		
3	NKR55EU -1EXYP	○	—	○	—	—			—		○	—	—	○	—			○			○	—			○	—				○			—	—	△		
4	NKR58EU -1EXY	○	—	—	○	—			—		○	—	—	○	—			○			—	○			—	○				○			—	—	△		
5	NKR55EU -1EXYJ	○	—	○	—	—			—		○	—	—	○	—			○			○	—			○	—				○			△	—	△		
6	NKR66EU -1EXYH	—	○	—	○	—			—		○	—	—	○	—			○			○	—			○	—				○			—	○	△		
7	NKR69EAL-1DXYUK	○	—	○	—	—			—		○	—	—	○	—			○			—	○			—	○				○			—	○	○		
8	NKR55E2U-5HXY	○	—	—	○	—			—		○	—	—	○	—			○			○	—			○	—				○			—	—	△		
9	NKR69E2U-5HYK	○	—	—	○	—			—		○	—	—	○	—			○			○	—			○	—				○			—	—	△		
10	NKR55E2U-5HXYP	○	—	—	○	—			—		○	—	—	○	—			○			○	—			○	—				○			—	—	△		
12	NKR58E2U-5HXY	○	—	—	○	—			—		○	—	—	○	—			○			—	○			—	○				○			—	—	△		
15	NKR66E2U-5EXYH	○	—	—	○	—			—		○	—	—	○	—			○			—	○			—	○				○			—	○	△		
16	NKR58EDL-5EMXD	○	—	—	○	—			—		○	—	—	○	—			○			—	○			—	○				○			—	—	△		
17	NKR55LU -5HXYZJ	○	—	—	○	—			—		○	—	—	○	—			○			○	—			○	—				○			○	—	△		
18	NKR55LU -5HXYJ	○	—	—	○	—			—		○	—	—	○	—			○			○	—			○	—				○			—	—	△		
19	NKR55LU -5HXY	○	—	—	○	—			—		○	—	—	○	—			○			○	—			○	—				○			—	—	△		
20	NKR55LU -5HXA	○	—	—	○	—			—		○	—	—	○	—			○			○	—			○	—				○			—	—	△		
21	NKR69LU -5HYK	○	—	—	○	—			—		○	—	—	○	—			○			○	—			○	—				○			—	—	△		
22	NKR58LU -5HXY	○	—	—	○	—			—		○	—	—	○	—			○			—	○			—	○				○			—	—	△		
24	NKR58LU -5HXA	○	—	—	○	—			—		○	—	—	○	—			○			—	○			—	○				○			—	—	△		
25	NKR58LU -5HYIN	○	—	—	○	—			—		—	○	—	—	○			○			—	○			—	○				○			—	—	△		
26	NKR66LU -5LXYP	○	—	—	—	○			—		—	○	—	—	○			○				○				○				—	○		—	—	△		
27	NKR66LU -5LYIN	○	—	—	—	○			—		—	○	—	—	○				○			○				○				—	○		—	—	△		
28	NKR55EU -3EXY	○	—	—	○	—			○		—	—	○	—	—			○			○	—			○	—				○			—	—	△		

FRONT BRAKES (NKR 1998)

—	Not available
○	Standard
△	Factory option
	Non

		FRONT BRAKE																									
		DISC BRAKE										DRUM BRAKE															
		WHEEL CYL.			DISC					PAD		Type		WHEEL CYL.				DRUM			LINING						
		Inside dia. (in)			Thickness (mm)		Outside dia. (mm)			Thickness (mm)		2L	D2L	Inside dia. (in)				Inside dia. (mm)			Thickness (mm)			Width (mm)			
		2+1/8	2+2	2+1/4	35	42	265	282	310	14.0	13.0			1+1/8	1+3/16	1+5/16	1+3/8	279.4	300	320	6.9	9.6	11.0	60	75	100	120
No.	Models	1	2	3	4	5	6	7	8	9	10	11	12	13	14	15	16	17	18	19	20	21	22	23	24	25	26
29	NKR66EU -3EXYH						—	○	—	○					○	—	○		—		—	—		—		—	
30	NKR55EU -1DWY		—		—		—	—		—		○	—	○					○	—	○	—					
31	NKR55EU -1DWS		—		—		—	—		—		○	—	○					○	—	○	—					
32	NKR69LU -5GWYK		—		—		—	—		—		○	—	○					○	—	○	—					
33	NKR58LU -5GWY		—		—		—	—		—		○	—	○					○	—	○	—					
34	NKR55EL -1EY		—		—		—	—		—		○	—	○					○	—	○	—					
35	NKR55EL -1EXY		—		—		—	—		—		○	—	○					○	—	○	—					
36	NKR55EL -1EXYJ		—		—		—	—		—		○	—	○					○	—	○	—			○		
37	NKR55EL -1EXA		—		—		—	—		—		○	—	○					○	—	○	—					
38	NKR55EL -1EXYG		—		—		—	—		—		○	—	○					○	—	○	—					
39A	NKR55EL -1EAC		—		—		—	—		—		○	—	○					○	—	○	—					
42	NKR58EL -1EXY		—		—		—	—		—		○	—	○					○	—	○	—			○		
43	NKR69EL -1EXYR		—		—		—	—		—		○	—	○					○	—	○	—			○		
44	NKR69EAL-1DXYE		○		○		○	—		○		—	—	—					—	—	—	—			—		
45	NKR55E2L-5HXY		—		—		—	—		—		○	—	○					○	—	○	—			○		
45A	NKR55E2L-5HXYCL		—		—		—	—		—																	
47	NKR55E2L-5HXYG		—		—		—	—		—		○	—	○					○	—	○	—			○		
49	NKR58E2L-5HXY		—		—		—	—		—		○	—	○					○	—	○	—			○		
50	NKR58E2L-5HXA		—		—		—	—		—		○	—	○					○	—	○	—			○		
51	NKR58E2L-5HXYS		—		—		—	—		—		○	—	○					○	—	○	—			○		
52	NKR58E2L-5HXAS		—		—		—	—		—		○	—	○					○	—	○	—			○		
53	NKR58EDL-5EMXD		—		—		—	—		—		—	○	○					○	—	○	—			○		
54	NKR58EDL-5EMXDS		—		—		—	—		—		—	○	○					○	—	○	—			○		
55	NKR66E2L-5HXYR		—		—		—	—		—		○		○					—	○	—	○			○		

REAR BRAKES (NKR 1998)

—	Not available
○	Standard
△	Factory option
	Non

		REAR BRAKE																				PARKING BRAKE								BRAKE CONTROL								
		DRUM BRAKE																																				
		TYPE		WHEEL CYL.					DRUM				LINING									DRUM				LINING				MASTER CYL.								
				Inside dia. (in)					Inside dia. (mm)				Thickness (mm)				Width (mm)				Inside dia. (mm)				Width (mm)				Inside dia. (in)								
		D2L (W/O AUTO)	D2L (W AUTO)	7/8	1	1+3/16	1+5/16	1+3/8	228.6	279.4	300	320	4.9	6.0	9.6	11.0	60	75	100	120	178	190	203	254	35	45	50	60	1+1/16	1+1/8	1+1/4	1+3/8	DSPV	LSPV	EXHAUST BRAKE	HYDROMASTER	HBB
No.	Models	1	2	3	4	5	6	7	8	9	10	11	12	13	14	15	16	17	18	19	20	21	22	23	24	25	26	27	28	29	30	31	32	33	34	35	36
29	NKR66EU -3EXYH	○	—	—	○	—			—		○	—	—	○	—			○			—	○			—	○				○			—	○	△		
30	NKR55EU -1DWY	○	—	○	—	—			—		○	—	—	○	—			○			○	—			○	—				○			—	—	△		
31	NKR55EU -1DWS	○	—	—	○	—			—		○	—	—	○	—			○			○	—			○	—				○			△	—	△		
32	NKR69LU -5GWYK	○	—	—	○	—			—		○	—	—	○	—			○			○	—			○	—				○			—	—	△		
33	NKR58LU -5GWY	○	—	—	○	—			—		○	—	—	○	—			○			—	○			—	○				○			—	—	△		
34	NKR55EL -1EY	○	—	○	—	—			—		○	—	—	○	—			○			○	—			○	—				○			—	—	△		
35	NKR55EL -1EXY	○	—	○	—	—			—		○	—	—	○	—			○			○	—			○	—				○			—	—	△		
36	NKR55EL -1EXYJ	○	—	○	—	—			—		○	—	—	○	—			○			○	—			○	—				○			—	—	△		
37	NKR55EL -1EXA	○	—	—	○	—			—		○	—	—	○	—			○			○	—			○	—				○			△	—	△		
38	NKR55EL -1EXYG	○	—	○	—	—			—		○	—	—	○	—			○			○	—			○	—				○			—	—	△		
39A	NKR55EL -1EAC	○	—	—	○	—			—		○	—	—	○	—			○			○	—			○	—				○			○	—	△		
42	NKR58EL -1EXY	—	○	—	○	—			—		○	—	—	○	—			○			○	—			○	—				○			—	○	△		
43	NKR69EL -1EXYR	○	—	○	—	—			—		○	—	—	○	—			○			—	○			—	○				○			—	—	△		
44	NKR69EAL-1DXYE	○	—	○	—	—			—		○	—	—	○	—			○			○	—			○	—				○			—	○	○		
45	NKR55E2L-5HXY	○	—	—	○				—		○	—	—	○	—			○			—	○			—	○				○			—	—	△		
45A	NKR55E2L-5HXYCL	○	—	—	○				—		○	—						○			○	—			○	—				○			—	—	△		
47	NKR55E2L-5HXYG	○	—	—	○				—		○	—	—	○	—			○			○	—			○	—				○			—	—	△		
49	NKR58E2L-5HXY	○	—	—	○				—		○	—	—	○	—			○			—	○			—	○				○			—	—	△		
50	NKR58E2L-5HXA	○	—	—	○				—		○	—	—	○	—			○			—	○			—	○				○			P	—	△		
51	NKR58E2L-5HXYS	○	—	—	○				—		○	—	—	○	—			○			—	○			—	○				○			—	—	△		
52	NKR58E2L-5HXAS	○	—	—	○				—		○	—	—	○	—			○			—	○			—	○				○			P	—	△		
53	NKR58EDL-5EMXD	○	—	—	○				—		○	—	—	○	—			○			—	○			—	○				○			—	—	△		
54	NKR58EDL-5EMXDS	○	—	—	○				—		○	—	—	○	—			○			—	○			—	○				○			—	—	△		
55	NKR66E2L-5HXYR	○	—	—	○				—		—	○	—	—	○			○			—	○			—	○				○			—	—	△		

FRONT BRAKES (NKR 1998)

—	Not available
○	Standard
△	Factory option
	Non

		FRONT BRAKE																									
		DISC BRAKE										DRUM BRAKE															
		WHEEL CYL.			DISC					PAD		Type		WHEEL CYL.				DRUM			LINING						
		Inside dia. (in)			Thickness (mm)		Outside dia. (mm)			Thickness (mm)		2L	D2L	Inside dia. (in)				Inside dia. (mm)			Thickness (mm)			Width (mm)			
		2 + 1/8	2 + 2	2 + 1/4	35	42	265	282	310	14.0	13.0			1 + 1/8	1 + 3/16	1 + 5/16	1 + 3/8	279.4	300	320	6.9	9.6	11.0	60	75	100	120
No.	Models	1	2	3	4	5	6	7	8	9	10	11	12	13	14	15	16	17	18	19	20	21	22	23	24	25	26
56	NKR66E2L-5HXFYR		—		—		—	—	—	—		○		○						○		○			○		
57	NKR55LL -5HXA	—	—		—		—	—		—		○	—	○					○	—	○	—			○		
58	NKR55LL -5HXY	—	—		—		—	—		—		○	—	○	—				○	—	○	—			○		
59	NKR55LL -5HXYJ	—	—		—		—	—		—		○	—	○	—				○	—	○	—			○		
60	NKR69LL -5HXYCH	—	—		—		—	—		—		○	—	○	—				○	—	○	—			○		
63	NKR55LL -5EAC	—	—		—		—	—		—		○	—	○	—				○	—	○	—			○		
65	NKR55LL -5HXYCJ	—	—		—		—	—		—		○	—	○	—				○	—	○	—			○		
66	NKR55LL -5HXAC	—	—		—		—	—		—		○	—	○	—				○	—	○	—			○		
67	NKR55LL -5HXACJ	—	—		—		—	—		—		○	—	○	—				○	—	○	—			○		
69	NKR55LL -5HACJ	—	—		—		—	—		—		○	—	○	—				○	—	○	—			○		
70	NKR58LL -5HXY	—	—		—		—	—		—		○	—	○	—				○	—	○	—			○		
71	NKR58LL -5HXA	—	—		—		—	—		—		○	—	○	—				○	—	○	—			○		
72	NKR58LL -5HXYS	—	—		—		—	—		—		○	—	○	—				○	—	○	—			○		
73	NKR58LL -5HXAS	—	—		—		—	—		—		○	—	○	—				○	—	○	—			○		
74	NKR66LL -5HXYR	—	—		—		—	—		—		○	—	○	—				—	○	—	○			○		
77	NKR69LL -5DXYE	○	—		○		—	○		○		—	—	—	—				—	—	—	—			—		
78	NKR69LL -5HXYE	○	—		○		—	○		○		—	—	—	—				—	—	—	—			—		
78A	NKR69LL -5HXYBR	—	—		—		—	—		—		○	—	○	—				○	—	○	—			○		
79	NKR55EL -3EXY		—		—		—	—		—		○	—	○					○		○				○		
80	NKR69EL -3EXYR		—		—		—	—		—		○	—	○					○		○				○		
81	NKR55EL -1DWSC		—		—		—	—		—		○	—	○					○	—	○	—			○		
82A	NKR58LL -5GWYS		—		—		—	—		—																	
84	NKR58GL -5JXY		—		—		—	—		—		○	—	○					○	—	○	—			○		

REAR BRAKES (NKR 1998)

—	Not available
○	Standard
△	Factory option
	Non

		REAR BRAKE																				PARKING BRAKE								BRAKE CONTROL								
		DRUM BRAKE																																				
		TYPE		WHEEL CYL.					DRUM				LINING									DRUM				LINING				MASTER CYL.								
				Inside dia. (in)					Inside dia. (mm)				Thickness (mm)				Width (mm)				Inside dia. (mm)				Width (mm)				Inside dia. (in)								
		D2L (W/O AUTO)	D2L (W AUTO)	7/8	1	1+3/16	1+5/16	1+3/8	228.6	279.4	300	320	4.9	6.0	9.6	11.0	60	75	100	120	178	190	203	254	35	45	50	60	1+1/16	1+1/8	1+1/4	1+3/8	DSPV	LSPV	EXHAUST BRAKE	HYDROMASTER	HBB
No.	Models	1	2	3	4	5	6	7	8	9	10	11	12	13	14	15	16	17	18	19	20	21	22	23	24	25	26	27	28	29	30	31	32	33	34	35	36
56	NKR66E2L-5HXFYR	○	—	—	○				—		—	○	—	—	○			○			—	○			—	○				○			—	—	△		
57	NKR55LL -5HXA	○	—	—	○	—			—		○	—	—	○	—			○			○	—			○	—				○			—	—	△		
58	NKR55LL -5HXY	○	—	—	○	—			—		○	—	—	○	—			○			○	—			○	—				○			—	—	△		
59	NKR55LL -5HXYJ	○	—	—	○	—			—		○	—	—	○	—			○			○	—			○	—				○			—	—	△		
60	NKR69LL -5HXYCH	○	—	—	○	—			—		○	—	—	○	—			○			○	—			○	—				○			—	—	△		
63	NKR55LL -5EAC	○	—	—	○	—			—		○	—	—	○	—			○			○	—			○	—				○			—	—	○		
65	NKR55LL -5HXYCJ	○	—	—	○	—			—		○	—	—	○	—			○			○	—			○	—				○			—	—	○		
66	NKR55LL -5HXAC	○	—	—	○	—			—		○	—	—	○	—			○			○	—			○	—				○			—	—	○		
67	NKR55LL -5HXACJ	○	—	—	○	—			—		○	—	—	○	—			○			○	—			○	—				○			—	—	○		
69	NKR55LL -5HACJ	○	—	—	○	—			—		○	—	—	○	—			○			○	—			○	—				○			—	—	○		
70	NKR58LL -5HXY	○	—	—	○	—			—		○	—	—	○	—			○			—	○			—	○				○			—	—	△		
71	NKR58LL -5HXA	○	—	—	○	—			—		○	—	—	○	—			○			—	○			—	○				○			—	—	△		
72	NKR58LL -5HXYS	○	—	—	○	—			—		○	—	—	○	—			○			—	○			—	○				○			—	—	△		
73	NKR58LL -5HXAS	○	—	—	○	—			—		○	—	—	○	—			○			—	○			—	○				○			—	—	△		
74	NKR66LL -5HXYR	○	—	—	○				—		—	○	—	○	—			○			—	○			—	○				○			—	—	△		
77	NKR69LL -5DXYE	—	○	—	○	—			—		—	○	—	—	○			○			○	—			○	—				○			—	○	○		
78	NKR69LL -5HXYE	—	○	—	○	—			—		—	○	—	—	○			○			○	—			○	—				○			—	○	○		
78A	NKR69LL -5HXYBR	○	—	—	○	—			—		○	—	—	○	—			○			○	—			○	—				○			—	○	△		
79	NKR55EL -3EXY	○	—	—	○				○		—	—	○	—				○			○	—			○	—				○			—	—	△		
80	NKR69EL -3EXYR	○	—	—	○				○		—	—	○	—				○			○	—			○	—				○			—	—	△		
81	NKR55EL -1DWSC	○	—	—	○				—		○	—	—	—				○			○	—			○	—				○			○	—	△		
82A	NKR58LL -5GWYS	○	—	—	○						○							○				○				○				○			—	—	△		
84	NKR58GL -5JXY	○	—	—	○				—		○	—	—	○	—			○			—	○			—	○				○			—	—	△		

FRONT BRAKES (NPR 1994 – 1997)

—	Not available
○	Standard
△	Factory option
	Non

		FRONT BRAKE																					
		DISC BRAKE								DRUM BRAKE													
		WHEEL CYL.		DISC				PAD		Type		WHEEL CYL.			DRUM			LINING					
		Inside dia. (in)		Thickness (mm)		Outside dia. (mm)		Thickness (mm)				Inside dia. (in)			Inside dia. (mm)			Thickness (mm)			Width (mm)		
		2 + 1/8	2	30	35	265	282	12.0	14.0	2L	D2L	1 + 1/8	1 + 1/16	1 + 3/16	279.4	300	320	6.0	9.6	11.0	60	75	100
No.	Models	1	2	3	4	5	6	7	8	9	10	11	12	13	14	15	16	17	18	19	20	21	22
1	NPR58GU -5EXYH	–			–		–		–	○	–	○		–			○		○	–		○	–
2	NPR58GU -5JXY	–			–		–		–	○	–	○		–			○		○	–		○	–
3	NPR58GU -5JXYSN	–			–		–		–	○	–	○		–			○		○	–		○	–
4	NPR66GU -5JXYK	–			–		–		–	○	–	○		–			○		○	–		○	–
5	NPR66GDU-5LX	–			–		–		–	–	○	–		○			○		–	○		–	○
6	NPR66GU -5LXY	–			–		–		–	○	–	–		○			○		–	○		–	○
7	NPR66GU -5LXYK	–			–		–		–	○	–	–		○			○		–	○		–	○
8	NPR66GU -5LXYSN	–			–		–		–	○	–	–		○			○		–	○		–	○
9	NPR69GU -5DXYE	○			○		○		○	–	–	–		–			–		–	–		–	–
10	NPR58LU -5EXYH	–			–		–		–	○		○		–			○		○	–		○	
11	NPR58LU -5JXYH	–			–		–		–	○		○		–			○		○	–		○	
12	NPR58LU -5JXA	–			–		–		–	○		○		–			○		○	–		○	
13	NPR58LU -5JXY	–			–		–		–	○		○		–			○		○	–		○	
14	NPR58LU -5JXYME	–			–		–		–	○		○		–			○		○	–		○	
15	NPR58LU -5JXYMW	–			–		–		–	○		○		–			○		○	–		○	
16	NPR58LU -5JXYSN	–			–		–		–	○		○		–			○		○	–		○	
17	NPR58LU -5JXYV	–			–		–		–	○		○		–			○		○	–		○	
18	NPR66LU -5EXYHT	○			○		○		○	–		–		–			–		–	–		–	
18a	NPR66LU -5JXYHT	○			○		○		○	–		–		–			–		–	–		–	
19a	NPR66LU -5JXYH	–			–		–		–	○		○		–			○		○	–		○	
19	NPR66LU -5JXYK	–			–		–		–	○		○		–			○		○	–		○	
20	NPR66LU -5LXA	–			–		–		–	○		–		○			○		–	○		–	○
21	NPR66LU -5LXY	–			–		–		–	○		–		○			○		–	○		–	○
22	NPR66LU -5LXYH	–			–		–		–	○		–		○			○		–	○		–	○
23	NPR66LU -5LXYIN	–			–		–		–	○		–		○			○		–	○		–	○

REAR BRAKES (NPR 1994 – 1997)

—	Not available
○	Standard
△	Factory option
	Non

		REAR BRAKE																	PARKING BRAKE				BRAKE CONTROL					
		DRUM BRAKE																										
		TYPE		WHEEL CYL.				DRUM				LINING							DRUM		LINING		MASTER CYL.					
				Inside dia. (in)				Inside dia. (mm)				Thickness (mm)				Width (mm)			Inside dia. (mm)		Width (mm)		Inside dia. (in)					
		D2L (W/O AUTO)	D2L (W AUTO)	7/8	1	1+3/16	1+5/16	228.6	279.4	300	320	4.9	6.0	9.6	11.0	60	75	100	178	190	35	45	1+1/16	1+1/8	1+1/4	DSPV	LSPV	EBXRHAKUEST
No.	Models	1	2	3	4	5	6	7	8	9	10	11	12	13	14	15	16	17	18	19	20	21	22	23	24	25	26	27
1	NPR58GU -5EXYH	○	–		○		–				○			○	–		○	–	–	○	–	○		○	–	–	○	○
2	NPR58GU -5JXY	○	–		○		–				○			○	–		○	–	–	○	–	○		○	–	–	–	○
3	NPR58GU -5JXYSN	○	–		○		–				○			○	–		○	–	–	○	–	○		○	–	–	–	○
4	NPR66GU -5JXYK	○	–		○		–				○			○	–		○	–	–	○	–	○		○	–	–	–	△
5	NPR66GDU-5LX	○	–		–	○	–				○			–	○		–	○	–	○	–	○		–	○	–	–	○
6	NPR66GU -5LXY	○	–		–	○	–				○			–	○		–	○	–	○	–	○		–	○	–	–	○
7	NPR66GU -5LXYK	○	–		–	○	–				○			–	○		–	○	–	○	–	○		–	○	–	–	△
8	NPR66GU -5LXYSN	○	–		–	○	–				○			–	○		–	○	–	○	–	○		–	○	–	–	○
9	NPR69GU -5DXYE	–	○		○		–				○			○	–		○	–	○	–	○	–		○	–	–	○	○
10	NPR58LU -5EXYH	○	–		○		–				○			○	–		○	–	–	○	–	○		○	–	–	○	○
11	NPR58LU -5JXYH	○	–		○		–				○			○	–		○	–	–	○	–	○		○	–	–	○	○
12	NPR58LU -5JXA	○	–		○		–				○			○	–		○	–	–	○	–	○		○	–	–	–	○
13	NPR58LU -5JXY	○	–		○		–				○			○	–		○	–	–	○	–	○		○	–	–	–	○
14	NPR58LU -5JXYME	○	–		○		–				○			○	–		○	–	–	○	–	○		○	–	–	–	○
15	NPR58LU -5JXYMW	○	–		○		–				○			○	–		○	–	–	○	–	○		○	–	–	–	○
16	NPR58LU -5JXYSN	○	–		○		–				○			○	–		○	–	–	○	–	○		○	–	–	–	○
17	NPR58LU -5JXYV	○	–		○		–				○			○	–		○	–	–	○	–	○		○	–	–	–	○
18	NPR66LU -5EXYHT	–	○		–	○	–				○			–	○		–	○	–	○	–	–		–	○	–	○	○
18a	NPR66LU -5JXYHT	–	○		–	○	–				○			–	○		–	○	–	○	–	–		–	○	–	○	○
19a	NPR66LU -5JXYH	○	–		○		–				○			○	–		○	–	–	○	–	○		○	–	–	○	○
19	NPR66LU -5JXYK	○	–		○		–				○			○	–		○	–	–	○	–	○		○	–	–	–	△
20	NPR66LU -5LXA	○	–		–	○	–				○			–	○		–	○	–	○	–	○		–	○	–	–	○
21	NPR66LU -5LXY	○	–		–	○	–				○			–	○		–	○	–	○	–	○		–	○	–	–	○
22	NPR66LU -5LXYH	○	–		–	○	–				○			–	○		–	○	–	○	–	○		–	○	–	○	○
23	NPR66LU -5LXYIN	○	–		–	○	–				○			–	○		–	○	–	○	–	○		–	○	–	–	○

FRONT BRAKES (NPR 1994 – 1997)

—	Not available
○	Standard
△	Factory option
	Non

		FRONT BRAKE																					
		DISC BRAKE								DRUM BRAKE													
		WHEEL CYL.		DISC				PAD		Type		WHEEL CYL.			DRUM			LINING					
		Inside dia. (in)		Thickness (mm)		Outside dia. (mm)		Thickness (mm)		2L	D2L	Inside dia. (in)			Inside dia. (mm)			Thickness (mm)			Width (mm)		
		2+1/8	2	30	35	265	282	12.0	14.0			1+1/8	1+1/16	1+3/16	279.4	300	320	6.0	9.6	11.0	60	75	100
No.	Models	1	2	3	4	5	6	7	8	9	10	11	12	13	14	15	16	17	18	19	20	21	22
24	NPR66LU -5LXYK	–			–		–		–	○		–		○			○		–	○		–	○
25	NPR66LU -5LXYP	–			–		–		–	○		–		○			○		–	○		–	○
26	NPR66LU -5LXYSN	–			–		–		–	○		–		○			○		–	○		–	○
27	NPR99LU -5JXYZ	–			–		–		–	○		○		–			○		○	–		○	–
28	NPR69LU -5DXYE	○			○		○		○	–		–		–			–		–	–		–	–
29	NPR69LU -5HXYE	○			○		○		○	–		–		–			–		–	–		–	–
30	NPR65LU -5JXKYEJ	○			○		○		○	–		–		–			–		–	–		–	–
31	NPR58PU -5JXA	–			–		–		–	○			○	–			○		○	–		○	–
32	NPR58PU -5JXY	–			–		–		–	○			○	–			○		○	–		○	–
33	NPR58PU -5JXYSN	–			–		–		–	○			○	–			○		○	–		○	–
34	NPR66PU -5JXYK	–			–		–		–	○			○	–			○		○	–		○	–
35	NPR66PU -5LXA	–			–		–		–	○			–	○			○		–	○		–	○
36	NPR66PU -5LXY	–			–		–		–	○			–	○			○		–	○		–	○
37	NPR66PU -5LXYK	–			–		–		–	○			–	○			○		–	○		–	○
38	NPR66PU -5LXYH	–			–		–		–	○			–	○			○		–	○		–	○
39	NPR66PU -5LXYME	–			–		–		–	○			–	○			○		–	○		–	○
40	NPR66PU -5LXYMW	–			–		–		–	○			–	○			○		–	○		–	○
41	NPR66PU -5LXYP	–			–		–		–	○			–	○			○		–	○		–	○
42	NPR66PU -5LXYSN	–			–		–		–	○			–	○			○		–	○		–	○
43a	NPR99PU -5JXYZ	–			–		–		–	○		○	–	–			○		○	–		○	–
43	NPR99PU -5LXYZ	–			–		–		–	○			–	○			○		–	○		–	○
44	NPR59PU -5LXYHJ	–			–		–		–	○			–	○			○		–	○		–	○
45	NPR59PU -5LXYVJ	–			–		–		–	○			–	○			○		–	○		–	○
46	NPR58LU -5HWYH	–			–		–		–	○		○					○		○			○	
47	NPR58LU -5HWYSN	–			–		–		–	○		○					○		○			○	

REAR BRAKES (NPR 1994 – 1997)

—	Not available
○	Standard
△	Factory option
	Non

		REAR BRAKE																	PARKING BRAKE				BRAKE CONTROL					
		DRUM BRAKE																										
		TYPE		WHEEL CYL.				DRUM				LINING							DRUM		LINING		MASTER CYL.					
				Inside dia. (in)				Inside dia. (mm)				Thickness (mm)				Width (mm)			Inside dia. (mm)		Width (mm)		Inside dia. (in)					
		D2L (W/O AUTO)	D2L (W AUTO)	7/8	1	1+3/16	1+5/16	228.6	279.4	300	320	4.9	6.0	9.6	11.0	60	75	100	178	190	35	45	1+1/16	1+1/8	1+1/4	DSPV	LSPV	EBXRHAAKUEST
No.	Models	1	2	3	4	5	6	7	8	9	10	11	12	13	14	15	16	17	18	19	20	21	22	23	24	25	26	27
24	NPR66LU -5LXYK	○	–		–	○	–				○			–	○		–	○	–	○	–	○		–	○	–	–	△
25	NPR66LU -5LXYP	○	–		–		○				○			–	○		–	○	–	○	–	○		–	○	–	–	○
26	NPR66LU -5LXYSN	○	–		–	○	–				○			–	○		–	○	–	○	–	○		–	○	–	–	○
27	NPR99LU -5JXYZ	○	–		○		–				○			○	–		○	–	–	○	–	○		○	–	–	○	○
28	NPR69LU -5DXYE	–	○		○		–				○			○	–		○	–	○	–	○	–		○	–	–	○	○
29	NPR69LU -5HXYE	–	○		○		–				○			○	–		○	–	○	–	○	–		○	–	–	○	○
30	NPR65LU -5JXYEJ	–	○		–	○	–				○			–	○		–	○	–	○	–	○		–	○	–	○	○
31	NPR58PU -5JXA	○	–		○		–				○			○	–		○	–	–	○	–	○		○	–	–	–	○
32	NPR58PU -5JXY	○	–		○		–				○			○	–		○	–	–	○	–	○		○	–	–	–	○
33	NPR58PU -5JXYSN	○	–		○		–				○			○	–		○	–	–	○	–	○		○	–	–	–	○
34	NPR66PU -5JXYK	○	–		○		–				○			○	–		○	–	–	○	–	○		○	–	–	–	△
35	NPR66PU -5LXA	○	–		–	○	–				○			–	○		–	○	–	○	–	○		–	○	–	–	○
36	NPR66PU -5LXY	○	–		–	○	–				○			–	○		–	○	–	○	–	○		–	○	–	–	○
37	NPR66PU -5LXYK	○	–		–	○	–				○			–	○		–	○	–	○	–	○		–	○	–	–	△
38	NPR66PU -5LXYH	○	–		–	○	–				○			–	○		–	○	–	○	–	○		–	○	–	○	○
39	NPR66PU -5LXYME	○	–		–	○	–				○			–	○		–	○	–	○	–	○		–	○	–	–	○
40	NPR66PU -5LXYMW	○	–		–	○	–				○			–	○		–	○	–	○	–	○		–	○	–	–	○
41	NPR66PU -5LXYP	○	–		–	○	–				○			–	○		–	○	–	○	–	○		–	○	–	–	○
42	NPR66PU -5LXYSN	○	–		–	○	–				○			–	○		–	○	–	○	–	○		–	○	–	–	○
43a	NPR99PU -5JXYZ	○	–		○		–				○			○	–		○	–	–	○	–	○		○	–	–	○	○
43	NPR99PU -5LXYZ	○	–		–	○	–				○			–	○		–	○	–	○	–	○		–	○	–	–	○
44	NPR59PU -5LXYHJ	○	–		–	○	–				○			–	○		–	○	–	○	–	○		–	○	–	○	○
45	NPR59PU -5LXYVJ	○	–		–	○	–				○			–	○		–	○	–	○	–	○		–	○	–	–	○
46	NPR58LU -5HWYH	○	–		○	–	–				○			○	–		○	–		○		○		○	–	–	○	○
47	NPR58LU -5HWYSN	○	–		○	–	–				○			○	–		○	–		○		○		○	–	–	–	○

FRONT BRAKES (NPR 1994 – 1997)

—	Not available
○	Standard
△	Factory option
	Non

		FRONT BRAKE																					
		DISC BRAKE								DRUM BRAKE													
		WHEEL CYL.		DISC				PAD		Type		WHEEL CYL.			DRUM			LINING					
		Inside dia. (in)		Thickness (mm)		Outside dia. (mm)		Thickness (mm)		2L	D2L	Inside dia. (in)			Inside dia. (mm)			Thickness (mm)			Width (mm)		
		2+1/8	2	30	35	265	282	12.0	14.0			1+1/8	1+1/16	1+3/16	279.4	300	320	6.0	9.6	11.0	60	75	100
No.	Models	1	2	3	4	5	6	7	8	9	10	11	12	13	14	15	16	17	18	19	20	21	22
48	NPR66LU -5HWYK	–			–		–		–	○		○					○		○			○	
49	NPR66PU -5LWYK	–			–		–		–	○				○			○			○			○
50	NPS66LU -5JXYH	–			–		–		–		○			○			○		○			○	
51	NPR58GL -5JXY	–			–		–		–	○	–	○		–			○		○	–		○	–
52	NPR58GL -5JXYS	–			–		–		–	○	–	○		–			○		○	–		○	–
53	NPR66GDL -5LX	–			–		–		–	–	○	–		○			○		–	○		–	○
54	NPR66GL -5LXY	–			–		–		–	○	–	–		○			○		–	○		–	○
55	NPR66GL -5LXYS	–			–		–		–	○	–	–		○			○		–	○		–	○
56	NPR66GL -5LXYR	–			–		–		–	○	–	–		○			○		–	○		–	○
57	NPR59GL -5LXYRJ	–			–		–		–	○	–	–		○			○		–	○		–	○
58	NPR58LL -5JXA	–			–		–		–	○		○		–			○		○	–		○	–
59	NPR58LL -5JXY	–			–		–		–	○		○		–			○		○	–		○	–
60	NPR58LL -5JXAC	–			–		–		–	○		○		–			○		○	–		○	–
61	NPR58LL -5JXYC	–			–		–		–	○		○		–			○		○	–		○	–
62	NPR58LL -5JXAS	–			–		–		–	○		○		–			○		○	–		○	–
63	NPR58LL -5JXYS	–			–		–		–	○		○		–			○		○	–		○	–
64	NPR66LL -5JXYR	–			–		–		–	○		○		–			○		○	–		○	–
65	NPR66LL -5LXA	–			–		–		–	○		–		○			○		–	○		–	○
66	NPR66LL -5LXY	–			–		–		–	○		–		○			○		–	○		–	○
67	NPR66LL -5LXAC	–			–		–		–	○		–		○			○		–	○		–	○
68	NPR66LL -5LXYC	–			–		–		–	○		–		○			○		–	○		–	○
69	NPR66LL -5LXAS	–			–		–		–	○		–		○			○		–	○		–	○
70	NPR66LL -5LXYS	–			–		–		–	○		–		○			○		–	○		–	○
71	NPR66LL -5LXYR	–			–		–		–	○		–		○			○		–	○		–	○
72	NPR66LL -5LXYCL	–			–		–		–	○		–		○			○		–	○		–	○

REAR BRAKES (NPR 1994 – 1997)

—	Not available
○	Standard
△	Factory option
	Non

		REAR BRAKE																	PARKING BRAKE				BRAKE CONTROL					
		DRUM BRAKE																										
		TYPE		WHEEL CYL.				DRUM				LINING							DRUM		LINING		MASTER CYL.					
				Inside dia. (in)				Inside dia. (mm)				Thickness (mm)				Width (mm)			Inside dia. (mm)		Width (mm)		Inside dia. (in)					
		D2L (W/O AUTO)	D2L (W AUTO)	7/8	1	1+3/16	1+5/16	228.6	279.4	300	320	4.9	6.0	9.6	11.0	60	75	100	178	190	35	45	1+1/16	1+1/8	1+1/4	DSPV	LSPV	EBXRHAKUEST
No.	Models	1	2	3	4	5	6	7	8	9	10	11	12	13	14	15	16	17	18	19	20	21	22	23	24	25	26	27
48	NPR66LU -5HWYK	○	–		○	–	–				○			○	–		○	–		○		○		○	–	–	–	△
49	NPR66PU -5LWYK	○	–		–	○	–				○			–	○		–	○		○		○		–	○	–	–	△
50	NPS66LU -5JXYH	○	–		–	–	○				○			–	○		–	○		○		○		–	○	–	○	○
51	NPR58GL -5JXY	○	–		○		–				○			○	–		○	–		○		○		○	–	–	–	○
52	NPR58GL -5JXYS	○	–		○		–				○			○	–		○	–		○		○		○	–	–	–	○
53	NPR66GDL-5LX	○	–		–	○	–				○			–	○		–	○		○		○		–	○	–	–	○
54	NPR66GL -5LXY	○	–		–	○	–				○			–	○		–	○		○		○		–	○	–	–	○
55	NPR66GL -5LXYS	○	–		–	○	–				○			–	○		–	○		○		○		–	○	–	–	○
56	NPR66GL -5LXYR	○	–		–	○	–				○			–	○		–	○		○		○		–	○	–	–	○
57	NPR59GL -5LXYRJ	○	–		–	○	–				○			–	○		–	○		○		○		–	○	–	–	○
58	NPR58LL -5JXA	○	–		○		–				○			○	–		○	–		○		○		○	–	–	–	○
59	NPR58LL -5JXY	○	–		○		–				○			○	–		○	–		○		○		○	–	–	–	○
60	NPR58LL -5JXAC	○	–		○		–				○			○	–		○	–		○		○		○	–	–	–	○
61	NPR58LL -5JXYC	○	–		○		–				○			○	–		○	–		○		○		○	–	–	–	○
62	NPR58LL -5JXAS	○	–		○		–				○			○	–		○	–		○		○		○	–	–	–	○
63	NPR58LL -5JXYS	○	–		○		–				○			○	–		○	–		○		○		○	–	–	–	○
64	NPR66LL -5JXYR	○	–		○		–				○			○	–		○	–		○		○		○	–	–	–	○
65	NPR66LL -5LXA	○	–		–	○	–				○			–	○		–	○		○		○		–	○	–	–	○
66	NPR66LL -5LXY	○	–		–	○	–				○			–	○		–	○		○		○		–	○	–	–	○
67	NPR66LL -5LXAC	○	–		–	○	–				○			–	○		–	○		○		○		–	○	–	–	○
68	NPR66LL -5LXYC	○	–		–	○	–				○			–	○		–	○		○		○		–	○	–	–	○
69	NPR66LL -5LXAS	○	–		–	○	–				○			–	○		–	○		○		○		–	○	–	–	○
70	NPR66LL -5LXYS	○	–		–	○	–				○			–	○		–	○		○		○		–	○	–	–	○
71	NPR66LL -5LXYR	○	–		–	○	–				○			–	○		–	○		○		○		–	○	–	–	○
72	NPR66LL -5LXYCL	○	–		–	○	–				○			–	○		–	○		○		○		–	○	–	–	○

FRONT BRAKES (NPR 1994 – 1997)

—	Not available
○	Standard
△	Factory option
	Non

		FRONT BRAKE																					
		DISC BRAKE								DRUM BRAKE													
		WHEEL CYL.		DISC				PAD		Type		WHEEL CYL.			DRUM			LINING					
		Inside dia. (in)		Thickness (mm)		Outside dia. (mm)		Thickness (mm)		2L	D2L	Inside dia. (in)			Inside dia. (mm)			Thickness (mm)			Width (mm)		
		2+1/8	2	30	35	265	282	12.0	14.0			1+1/8	1+1/16	1+3/16	279.4	300	320	6.0	9.6	11.0	60	75	100
No.	Models	1	2	3	4	5	6	7	8	9	10	11	12	13	14	15	16	17	18	19	20	21	22
73	NPR66LL -5LXYG	–			–		–		–	○		–		○			○		–	○		–	○
74	NPR69LL -5DXYE	○			○		○		○	–		–		–			–		–	–		–	–
75	NPR69LL -5HXYE	○			○		○		○	–		–		–			–		–	–		–	–
76	NPR59LL -5LXYCLJ	–			–		–		–	○		–		○			○		–	○		–	○
77	NPR59LL -5LXYRJ	–			–		–		–	○		–		○			○		–	○		–	○
78	NPR58PL -5JXA	–			–		–		–	○		○		–			○		○	–		○	–
79	NPR58PL -5JXY	–			–		–		–	○		○		–			○		○	–		○	–
80	NPR66PL -5LXA	–			–		–		–	○		–		○			○		–	○		–	○
81	NPR66PL -5LXY	–			–		–		–	○		–		○			○		–	○		–	○
82	NPR66PL -5LXAC	–			–		–		–	○		–		○			○		–	○		–	○
83	NPR66PL -5LXYC	–			–		–		–	○		–		○			○		–	○		–	○
84	NPR66PL -5LXAS	–			–		–		–	○		–		○			○		–	○		–	○
85	NPR66PL -5LXYS	–			–		–		–	○		–		○			○		–	○		–	○
86	NPR66PL -5LXYR	–			–		–		–	○		–		○			○		–	○		–	○
87	NPR65PL -5JXYEJ	○			○		○		○	–		–		–			–		–	–		–	–
88	NPR59PL -5LXYRJ	–			–		–		–	○		–		○			○		–	○		–	○
89	NPR58LL -5HWYC	–			–		–		–	○		○		–			○		○	–		○	–

REAR BRAKES (NPR 1994 – 1997)

—	Not available
○	Standard
△	Factory option
	Non

		REAR BRAKE																	PARKING BRAKE				BRAKE CONTROL					
		DRUM BRAKE																										
		TYPE		WHEEL CYL.				DRUM				LINING							DRUM		LINING		MASTER CYL.					
				Inside dia. (in)				Inside dia. (mm)				Thickness (mm)				Width (mm)			Inside dia. (mm)		Width (mm)		Inside dia. (in)					
		D2L (W/O AUTO)	D2L (W AUTO)	7/8	1	1+3/16	1+5/16	228.6	279.4	300	320	4.9	6.0	9.6	11.0	60	75	100	178	190	35	45	1+1/16	1+1/8	1+1/4	DSPV	LSPV	EBXRHAKUEST
No.	Models	1	2	3	4	5	6	7	8	9	10	11	12	13	14	15	16	17	18	19	20	21	22	23	24	25	26	27
73	NPR66LL -5LXYG	○	–		–	○	–				○			–	○		–	○		○		○		–	○	–	–	○
74	NPR69LL -5DXYE	–	○		○		–				○			○	–		○	–		○		○		○	–	–	○	○
75	NPR69LL -5HXYE	–	○		○		–				○			○	–		○	–		○		○		○	–	–	○	○
76	NPR59LL -5LXYCLJ	○	–		–		○				○			–	○		–	○		○		○		–	○	–	–	○
77	NPR59LL -5LXYRJ	○	–		–		○				○			–	○		–	○		○		○		–	○	–	–	○
78	NPR58PL -5JXA	○	–		○		–				○			○	–		○	–		○		○		○	–	–	–	○
79	NPR58PL -5JXY	○	–		○		–				○			○	–		○	–		○		○		○	–	–	–	○
80	NPR66PL -5LXA	○	–		–	○	–				○			–	○		–	○		○		○		–	○	–	–	○
81	NPR66PL -5LXY	○	–		–	○	–				○			–	○		–	○		○		○		–	○	–	–	○
82	NPR66PL -5LXAC	○	–		–	○	–				○			–	○		–	○		○		○		–	○	–	–	○
83	NPR66PL -5LXYC	○	–		–	○	–				○			–	○		–	○		○		○		–	○	–	–	○
84	NPR66PL -5LXAS	○	–		–	○	–				○			–	○		–	○		○		○		–	○	–	–	○
85	NPR66PL -5LXYS	○	–		–	○	–				○			–	○		–	○		○		○		–	○	–	–	○
86	NPR66PL -5LXYR	○	–		–	○	–				○			–	○		–	○		○		○		–	○	–	–	○
87	NPR65PL -5JXYEJ	–	○		–	○	–				○			–	○		–	○		○		○		–	○	–	○	○
88	NPR59PL -5LXYRJ	○	–		–	○	–				○			–	○		–	○		○		○		–	○	–	–	○
89	NPR58LL -5HWYC	○	–		○		–				○			○	–		○	–		○		○		○	–	–	–	○

FRONT BRAKES (NQR 1994 – 1997)

—	Not available
○	Standard
△	Factory option
	Non

		FRONT BRAKE																						
		DISC BRAKE								DRUM BRAKE														
		WHEEL CYL.		DISC				PAD		Type		WHEEL CYL.				DRUM			LINING					
		Inside dia. (in)		Thickness (mm)		Outside dia. (mm)		Thickness (mm)		2 L	D 2 L	Inside dia. (in)				Inside dia. (mm)			Thickness (mm)			Width (mm)		
		2 + 1 / 8	2	30	35	265	282	12.0	14.0			1 + 1 / 8	1 + 1 / 16	1 + 3 / 16	1 + 3 / 8	279.4	300	320	6.0	9.6	11.0	75	100	120
No.	Models	1	2	3	4	5	6	7	8	9	10	11	12	13	14	15	16	17	18	19	20	21	22	23
1	NQR66LU -5NVXY	–			–		–		–	○				○	△			○			○		–	○
2	NQR66PU -5NVXY	–			–		–		–	○		–	–	○	△			○			○	–	–	○
3	NQR66LL -5NVXY	–			–		–		–	○				○	△			○			○	–	–	○
4	NQR66PL -5NVXY	–			–		–		–	○				○	△			○		–	○	–	–	○
5	NQR66RU -5NVXY	–			–		–		–	○				○	△			○			○			○
6	NQR66RL -5NVXY	–			–		–		–	○				○	△			○			○			○
7	NQR66LU -5NVXYP	–			–		–		–	○				–	○			○			○			○
8	NQR66RU -5NVXYP	–			–		–		–	○				–	○			○			○			○

REAR BRAKES (NQR 1994 – 1997)

—	Not available
○	Standard
△	Factory option
	Non

		REAR BRAKE																	PARKING BRAKE				BRAKE CONTROL							
		DRUM BRAKE																												
		TYPE		WHEEL CYL.					DRUM				LINING							DRUM		LINING		MASTER CYL.							
				Inside dia. (in)					Inside dia. (mm)				Thickness (mm)				Width (mm)			Inside dia. (mm)		Width (mm)		Inside dia. (in)							
		D2L (W/O AUTO)	D2L (W AUTO)	7/8	1	1+3/16	1+5/16	1+3/8	228.6	279.4	300	320	4.9	6.0	9.6	11.0	75	100	120	178	190	35	45	1+1/16	1+1/8	1+1/4	1+3/8 SINGLE	DSPV	LSPV	EBXRHAAKUEST	HYDROMASTER
No.	Models	1	2	3	4	5	6	7	8	9	10	11	12	13	14	15	16	17	18	19	20	21	22	23	24	25	26	27	28	29	30
1	NQR66LU-5NVXY	○	–		–	–	○	△				○			–	○	–	–	○	–	○	–	○		–	○	△	–	–	○	△
2	NQR66PU-5NVXY	○	–		–	–	○	△				○			–	○	–	–	○	–	○		○			○	△	–	–	○	△
3	NQR66LL-5NVXY	○	–		–	–	○	△				○				○		–	○		○		○			○	△	–	–	○	△
4	NQR66PL-5NVXY	○	–		–	–	○	△				○			–	○	–	–	○		○		○		–	○	△	–	–	○	△
5	NQR66RU-5NVXY	○	–		–	–	○	△				○				○			○		○		○			○	△	–	–	○	△
6	NQR66RL-5NVXY	○	–		–	–	○	△				○				○			○		○		○			○	△	–	–	○	△
7	NQR66LU-5NVXYP	○	–		–	–	–	○				○				○			○		○		○			–	○	–	–	○	○
8	NQR66RU-5NVXYP	○	–		–	–	–	○				○				○			○		○		○			–	○	–	–	○	○

FRONT BRAKES (NPR·NQR 1998)

—	Not available
○	Standard
△	Factory option
	Non

		FRONT BRAKE																									
		DISC BRAKE										DRUM BRAKE															
		WHEEL CYL.			DISC					PAD		Type		WHEEL CYL.				DRUM			LINING						
		Inside dia. (in)			Thickness (mm)		Outside dia. (mm)			Thickness (mm)		2L	D2L	Inside dia. (in)				Inside dia. (mm)			Thickness (mm)			Width (mm)			
		2+1/8	2+2	2+1/4	35	42	265	282	310	14.0	13.0			1+1/8	1+3/16	1+5/16	1+3/8	279.4	300	320	6.9	9.6	11.0	60	75	100	120
No.	Models	1	2	3	4	5	6	7	8	9	10	11	12	13	14	15	16	17	18	19	20	21	22	23	24	25	26
1	NPR58GU -5JXY											○	—	○	—		—			○		○	—		○	—	—
2	NPR66GU -5EXYH											○	—	○	—		—			○		○	—		○	—	—
3	NPR66GU -5JXYSN											○	—	○	—		—			○		○	—		○	—	—
4	NPR66GDU-5LX											—	○	—	○		—			○		—	○		—	○	—
5	NPR66GU -5LXY											○	—	—	○		—			○		—	○		—	○	—
6	NPR65GU -5JXYKJ											○	—	○	—		—			○		○	—		○	—	—
7	NPR65GU -5LXYKJ											○	—	—	○		—			○		—	○		—	○	—
8	NPR58LU -5JXA											○		○	—		—			○		○	—		○	—	—
9	NPR58LU -5JXY											○		○	—		—			○		○	—		○	—	—
12	NPR66LBU-5JVXY											○		○	—		—			○		○	—		○	—	—
13	NPR66LU -5LXA											○		—	○		—			○		—	○		—	○	—
14	NPR66LU -5LXY											○		—	○		—			○		—	○		—	○	—
15	NPR66LU -5LXYP											○		—	○		—			○		—	○		—	○	—
16	NPR66LU -5JVXYZ											○		○	—		—			○		○	—		○	—	—
17	NPR66LU -5EVXYH											○		○	—		—			○		○	—		○	—	—
18	NPR71LU -5JVXYH											○		○	—		—			○		○	—		○	—	—
19	NPR71LU -5JVXYHT	○			○			○		○																	
20	NPR71LU -5LVXYH											○		—	○		—			○		—	○		—	○	—
21	NQR71LU -5NVXY											○		—	—	○	△			○		—	○		—	—	○
22	NQR66LU -5NVXYP											○		—	—		○			○		—	○		—	—	○
23	NPR69LU -5DXYIR	○			○			○		○																	
24	NPR69LU -5HXYIR	○			○			○		○																	
25	NPR65LU -5JXYIRJ	○			○			○		○																	
26	NPR65LU -5JXYUKJ	○			○			○		○																	

REAR BRAKES (NPR·NQR 1998)

—	Not available
○	Standard
△	Factory option
	Non

		REAR BRAKE																			PARKING BRAKE								BRAKE CONTROL								
		DRUM BRAKE																																			
		TYPE		WHEEL CYL.					DRUM				LINING								DRUM				LINING				MASTER CYL.								
				Inside dia. (in)					Inside dia. (mm)				Thickness (mm)				Width (mm)				Inside dia. (mm)				Width (mm)				Inside dia. (in)								
		D2L (W/O AUTO)	D2L (W AUTO)	7/8	1	1+3/16	1+5/16	1+3/8	228.6	279.4	300	320	4.9	6.0	9.6	11.0	60	75	100	120	178	190	203	254	35	45	50	60	1+1/16	1+1/8	1+1/4	1+3/8	DSPV	LSPV	EXHAUST BRAKE	HYDROMASTER	HBB
No.	Models	1	2	3	4	5	6	7	8	9	10	11	12	13	14	15	16	17	18	19	20	21	22	23	24	25	26	27	28	29	30	31	32	33	34	35	36
1	NPR58GU -5JXY	○	—		○	—	—	—				○			○	—		○	—	—	—	○	—	—	—	○	—	—		○	—	—		—	○	—	—
2	NPR66GU -5EXYH	○	—		○	—	—	—				○			○	—		○	—	—	—	○	—	—	—	○	—	—		○	—	—		○	○	—	—
3	NPR66GU -5JXYSN	○	—		○	—	—	—				○			○	—		○	—	—	—	○	—	—	—	○	—	—		○	—	—		—	○	—	—
4	NPR66GDU-5LX	○	—		—	○	—	—				○			—	○		—	○	—	—	○	—	—	—	○	—	—		—	○	—		—	○	—	—
5	NPR66GU -5LXY	○	—		—	○	—	—				○			—	○		—	○	—	—	○	—	—	—	○	—	—		—	○	—		—	○	—	—
6	NPR65GU -5JXYKJ	○	—		○	—	—	—				○			○	—		○	—	—	—	○	—	—	—	○	—	—		○	—	—		—	△	—	—
7	NPR65GU -5LXYKJ	○	—		—	○	—	—				○			—	○		—	○	—	—	○	—	—	—	○	—	—		—	○	—		—	△	—	—
8	NPR58LU -5JXA	○	—		○	—	—	—				○			○	—		○	—	—	—	○	—	—	—	○	—	—		○	—	—		—	○	—	—
9	NPR58LU -5JXY	○	—		○	—	—	—				○			○	—		○	—	—	—	○	—	—	—	○	—	—		○	—	—		—	○	—	—
12	NPR66LBU-5JVXY	○	—		○	—	—	—				○			○	—		○	—	—	—	○	—	—	—	○	—	—		○	—	—		○	○	—	—
13	NPR66LU -5LXA	○	—		—	○	—	—				○			—	○		—	○	—	—	○	—	—	—	○	—	—		—	○	—		—	○	—	—
14	NPR66LU -5LXY	○	—		—	○	—	—				○			○	—		—	○	—	—	○	—	—	—	○	—	—		—	○	—		—	○	—	—
15	NPR66LU -5LXYP	○	—		—	○	—	—				○			○	—		—	○	—	—	○	—	—	—	○	—	—		—	○	—		—	○	—	—
16	NPR66LU -5JVXYZ	○	—		○	—	—	—				○			○	—		○	—	—	—	○	—	—	—	○	—	—		○	—	—		○	○	—	—
17	NPR66LU -5EVXYH	○	—		○	—	—	—				○			○	—		○	—	—	—	○	—	—	—	○	—	—		○	—	—		○	○	—	—
18	NPR71LU -5JVXYH	○	—		○	—	—	—				○			○	—		○	—	—	—	○	—	—	—	○	—	—		○	—	—		○	○	—	—
19	NPR71LU -5JVXYHT	○	○		—	○	—	—				○			—	○		—	○	—	—	○	—	—	—	○	—	—		○	—	—		○	○	—	—
20	NPR71LU -5LVXYH	○	—		—	—	○	—				○			—	○		—	○	—	—	○	—	—	—	○	—	—		—	○	—		○	○	—	—
21	NQR71LU -5NVXY	○	—		—	—	○	△				○			—	○		—	—	○	—	○	—	—	—	○	—	—		—	○	△		—	○	△	—
22	NQR66LU -5NVXYP	○	—		—	—	△	○				○			—	○		—	—	○	—	○	—	—	—	○	—	—		—	—	○		—	○	○	—
23	NPR69LU -5DXYIR	○	○		○	—	—	—				○			○	—		○	—	—	○	—	—	—	○	—	—	—		○	—	—		○	○	—	—
24	NPR69LU -5HXYIR	○	○		○	—	—	—				○			○	—		○	—	—	○	—	—	—	○	—	—	—		○	—	—		○	○	—	—
25	NPR65LU -5JXYIRJ	○	○		—	○	—	—				○			—	○		—	○	—	—	○	—	—	—	○	—	—		—	○	—		○	○	—	—
26	NPR65LU -5JXYUKJ	○	○		—	○	—	—				○			—	○		—	○	—	—	○	—	—	—	○	—	—		—	○	—		○	○	—	—

FRONT BRAKES (NPR·NQR 1998)

—	Not available
○	Standard
△	Factory option
	Non

		FRONT BRAKE																									
		DISC BRAKE										DRUM BRAKE															
		WHEEL CYL.			DISC					PAD		Type		WHEEL CYL.				DRUM			LINING						
		Inside dia. (in)			Thickness (mm)		Outside dia. (mm)			Thickness (mm)		2L	D2L	Inside dia. (in)				Inside dia. (mm)			Thickness (mm)			Width (mm)			
		2+1/8	2+2	2+1/4	35	42	265	282	310	14.0	13.0			1+1/8	1+3/16	1+5/16	1+3/8	279.4	300	320	6.9	9.6	11.0	60	75	100	120
No.	Models	1	2	3	4	5	6	7	8	9	10	11	12	13	14	15	16	17	18	19	20	21	22	23	24	25	26
27	NPR65LU -5JXYKJ											○		○	—		—			○		○	—		○	—	—
28	NPR65LU -5LXYKJ											○		—	○		—					—	○		—	○	—
29	NQR70LU -5LVXYIRJ			○		○			○		○																
30	NQR70LU-5LVXYUKJ			○		○			○		○																
31	NPR58PU -5JXA											○		○			—			○		○	—		○	—	—
32	NPR58PU -5JXY											○		○	—		—			○		○	—		○	—	—
33	NPR66PU -5JXYSN											○		○	—		—			○		○	—		○	—	—
34	NPR66PBU-5JVXY											○		○	—		—			○		○	—		○	—	—
35	NPR66PU -5LXA											○		—	○		—			○		—	○		—	○	—
36	NPR66PU -5LXY											○		—	○		—			○		—	○		—	○	—
37	NPR71PU -5LVXYH											○	—	—	○		—			○		—	○		—	○	—
38	NPR66PU -5LXYP											○		—	—		—			○		—	○		—	○	—
39	NQR71PU -5NVXY											○	—	—	—	○	△			○		—	○		—	—	○
41	NPR66PU -5LVXYZ											○		—	○		—			○		—	○		—	○	—
44	NPR65PU -5LXYVJ											○	—	—	○		—			○		—	○		—	○	—
45	NPR65PU -5JXYUKJ	○			○			○		○		○		○	—		—			○		○	—		○	—	—
46	NPR65PU -5JXYKJ											○	—	○	—		—			○		○	—		○	—	—
47	NPR65PU -5LXYKJ											○	—	—	○		—			○		—	○		—	○	—
48	NQR70PU-5LVXYUKJ			○		○					○																
49	NQR70PU -5NVXYHJ											○	—	—	—	○	—			○		—	○				○
50	NQR70PU -5NVXYKJ											○	—	—	—	○	—			○		—	○		—	—	○
51	NQR70PU -5NVXYVJ											○	—	—	—	○	—			○		—	○				○
52	NPR71LU -5HWYH											○	—	○	—		—			○		○	—		○	—	—
53	NPR66LU -5HWYSN											○	—	○	—		—			○		○	—		○	—	—

REAR BRAKES (NPR·NQR 1998)

—	Not available
○	Standard
△	Factory option
	Non

		REAR BRAKE																				PARKING BRAKE								BRAKE CONTROL								
		DRUM BRAKE																																				
		TYPE		WHEEL CYL.					DRUM				LINING									DRUM				LINING				MASTER CYL.								
				Inside dia. (in)					Inside dia. (mm)				Thickness (mm)				Width (mm)				Inside dia. (mm)				Width (mm)				Inside dia. (in)								
		D2L (W/O AUTO)	D2L (W AUTO)	7/8	1	1+3/16	1+5/16	1+3/8	228.6	279.4	300	320	4.9	6.0	9.6	11.0	60	75	100	120	178	190	203	254	35	45	50	60	1+1/16	1+1/8	1+1/4	1+3/8	DSPV	LSPV	EXHAUST BRAKE	HYDROMASTER	HBB
No.	Models	1	2	3	4	5	6	7	8	9	10	11	12	13	14	15	16	17	18	19	20	21	22	23	24	25	26	27	28	29	30	31	32	33	34	35	36
27	NPR65LU -5JXYKJ	○	—		○	—	—	—				○			—	○		○	—	—	—	○	—	—	—	○	—	—		○	—	—		—	△	—	—
28	NPR65LU -5LXYKJ	○	—		—	○	—	—				○			—	○		—	○	—	—	○	—	—	—	○	—	—		—	○	—		—	△	—	—
29	NQR70LU -5LVXYIRJ	○	○		—	—	○	—				○			—	○		—	—	○	—	—	—	○	—	—	—	○		—	—	○		○	○	—	○
30	NQR70LU-5LVXYUKJ	○	○		—	—	○	—				○			—	○		—	—	○	—	—	—	○	—	—	—	○		—	—	○		○	○	—	○
31	NPR58PU -5JXA	○	—		○	—	—	—				○			○	—		○	—	—	—	○	—	—	—	○	—	—	—	○	—	—		—	○	—	—
32	NPR58PU -5JXY	○	—		○	—	—	—				○			○	—		○	—	—	—	○	—	—	—	○	—	—		○	—	—		—	○	—	—
33	NPR66PU -5JXYSN	○	—		○	—	—	—				○			○	—		○	—	—	—	○	—	—	—	○	—	—		○	—	—		—	○	—	—
34	NPR66PBU-5JVXY	○	—		○	—	—	—				○			○	—		○	—	—	—	○	—	—	—	○	—	—		○	—	—		—	○	—	—
35	NPR66PU -5LXA	○	—		—	○	—	—				○			—	○		—	○	—	—	○	—	—	—	○	—	—		—	○	—		—	○	—	—
36	NPR66PU -5LXY	○	—		—	○	—	—				○			—	○		—	○	—	—	○	—	—	—	○	—	—		—	○	—		—	○	—	—
37	NPR71PU -5LVXYH	○	—		—	○	—	—				○			—	○		—	○	—	—	○	—	—	—	○	—	—		—	○	—		○	○	—	—
38	NPR66PU -5LXYP	○	—		—	○	—	—				○			—	○		—	○	—	—	○	—	—	—	○	—	—		—	○	—		—	○	—	—
39	NQR71PU -5NVXY	○	—		—	—	○	△				○			—	○		—	—	○	—	○	—	—	—	○	—	—		—	○	△		—	○	△	—
41	NPR66PU -5LVXYZ	○	—		—	○	—	—				○			—	○		—	○	—	—	○	—	—	—	○	—	—		—	○	—		○	○	—	—
44	NPR65PU -5LXYVJ	○	—		—	○	—	—				○			—	○		—	○	—	—	○	—	—	—	○	—	—		—	○	—		—	○	—	—
45	NPR65PU -5JXYUKJ	○	○		—	○	—	—				○			—	○		—	○	—	—	○	—	—	—	○	—	—		—	○	—		○	○	—	—
46	NPR65PU -5JXYKJ	○	—		○	—	—	—				○			○	—		○	—	—	—	○	—	—	—	○	—	—		○	—	—				—	—
47	NPR65PU -5LXYKJ	○	—		—	○	—	—				○			—	○		—	○	—	—	○	—	—	—	○	—	—		—	○	—		—	○	—	—
48	NQR70PU-5LVXYUKJ	○	○		—	—	○	—				○			—	○		—	—	○	—	—	—	○	—	—	—	○		—	—	○		○	○	—	○
49	NQR70PU -5NVXYHJ	○	—		—	—	○	—				○			—	○		—	—	○	—	—	○	—	—	—	○	—		—	—	○		○	○	—	○
50	NQR70PU -5NVXYKJ	○	—		—	—	○	—				○			—	○		—	—	○	—	—	○	—	—	—	○	—		—	—	○		—	○	—	○
51	NQR70PU -5NVXYVJ	○	—		—	—	○	—				○			—	○		—	—	○	—	—	○	—	—	—	○	—		—	—	○		—	○	—	○
52	NPR71LU -5HWYH	○	—		○	—	○	—				○			○	—		○	—	—	—	○	—	—	—	○	—	—		○	—	—		○	○	—	—
53	NPR66LU -5HWYSN	○	—		○	—	○	—				○			○	—		○	—	—	—	○	—	—	—	○	—	—		○	—	—		—	○	—	—

FRONT BRAKES (NPR-NQR 1998)

—	Not available
○	Standard
△	Factory option
	Non

		FRONT BRAKE																									
		DISC BRAKE										DRUM BRAKE															
		WHEEL CYL.			DISC					PAD		Type		WHEEL CYL.				DRUM			LINING						
		Inside dia. (in)			Thickness (mm)		Outside dia. (mm)			Thickness (mm)		2L	D2L	Inside dia. (in)				Inside dia. (mm)			Thickness (mm)			Width (mm)			
		2 + 1/8	2 + 2	2 + 1/4	35	42	265	282	310	14.0	13.0			1 + 1/8	1 + 3/16	1 + 5/16	1 + 3/8	279.4	300	320	6.9	9.6	11.0	60	75	100	120
No.	Models	1	2	3	4	5	6	7	8	9	10	11	12	13	14	15	16	17	18	19	20	21	22	23	24	25	26
54	NQR71RU -5NVXY											○	—	—	—	○	△			○		—	○		—	—	○
55	NQR66RU -5NVXYP											○	—	—	—		○			○		—	○		—	—	○
56	NQR70RU-5NVXYHJ											○	—	—	—	○	—			○		—	○		—	—	○
57	NQR70RU-5NVXYZJ											○	—	—	—	○	—			○		—	○		—	—	○
58	NQR70TU-5LVXYUKJ			○		○					○		—		—		—										
59	NQR70TU -5NVXYHJ											○	—	—	—	○	—			○		—	○		—	—	○
60	NQR70TU -5NVXYKJ											○	—	—	—	○	—			○		—	○		—	—	○
61	NQR70TU -5NVXYVJ											○	—	—	—	○	—			○		—	○		—	—	○
62	NPS71LU -5NVXYVJ											—	○	—	○	—	—			○		○	—		○	—	—
63	NPR58GL -5JXY											○	—	○	—	—	—			○		○	—		○	—	—
64	NPR66GDL-5LX											—	○	—	○	—	—			○		—	○		—	○	—
65	NPR66GL -5LXY											○	—	—	○	—	—			○		—	○		—	○	—
66	NPR66GL -5LXYR											○	—	—	○	—	—			○		—	○		—	○	—
67	NPR60GL -5DXYE	○			○			○		○																	
68	NPR58LL -5JXA											○	—	○	—	—	—			○		○	—		○	—	—
69	NPR58LL -5JXY											○	—	○	—	—	—			○		○	—		○	—	—
70	NPR58LL -5JXAC											○	—	○	—	—	—			○		○	—		○	—	—
71	NPR58LL -5JXYC											○		○	—	—	—			○		○	—		○	—	—
72	NPR58LL -5JXAS											○		○	—	—	—			○		○	—		○	—	—
73	NPR58LL -5JXYS											○		○	—	—	—			○		○	—		○	—	—
74	NPR66LL -5JXYR											○		○	—	—	—			○		○	—		○	—	—
75	NPR66LBL -5JVXY											○		○	—	—	—			○		○	—		○	—	—
76	NPR66LL -5LXA											○		—	○	—	—			○		—	○		—	○	—
77	NPR66LL -5LXY											○		—	○	—	—			○		—	○		—	○	—

REAR BRAKES (NPR-NQR 1998)

—	Not available
○	Standard
△	Factory option
	Non

		REAR BRAKE																				PARKING BRAKE								BRAKE CONTROL								
		DRUM BRAKE																																				
		TYPE		WHEEL CYL.					DRUM				LINING									DRUM				LINING				MASTER CYL.								
				Inside dia. (in)					Inside dia. (mm)				Thickness (mm)				Width (mm)				Inside dia. (mm)				Width (mm)				Inside dia. (in)								
		D2L (W/O AUTO)	D2L (W AUTO)	7/8	1	1+3/16	1+5/16	1+3/8	228.6	279.4	300	320	4.9	6.0	9.6	11.0	60	75	100	120	178	190	203	254	35	45	50	60	1+1/16	1+1/8	1+1/4	1+3/8	DSPV	LSPV	EXHAUST BRAKE	HYDROMASTER	HBB
No.	Models	1	2	3	4	5	6	7	8	9	10	11	12	13	14	15	16	17	18	19	20	21	22	23	24	25	26	27	28	29	30	31	32	33	34	35	36
54	NQR71RU -5NVXY	○	—		—	—	○	△				○			—	○		—	—	○	—	○	—	—	—	○	—	—		—	—	○		—	○	○	—
55	NQR66RU -5NVXYP	○	—		—	—	△	○				○			—	○		—	—	○	—	○	—	—	—	○	—	—		—	○	△		—	○	△	—
56	NQR70RU-5NVXYHJ	○	—		—	—	○	—				○			—	○		—	—	○	—	—	○	—	—	—	○	—		—	—	○		○	○	—	○
57	NQR70RU-5NVXYZJ	○	—		—	—	○	—				○			—	○		—	—	○	—	—	—	○	—	—	—	○		—	—	○		○	○	—	○
58	NQR70TU-5LVXYUKJ	○	○		—	—	○	—				○			—	○		—	—	○	—	—	—	○	—	—	—	○		—	—	○		○	○	—	○
59	NQR70TU -5NVXYHJ	○	—		—	—	○	—				○			—	○		—	—	○	—	—	○	—	—	—	○	—		—	—	○		○	○	—	○
60	NQR70TU -5NVXYKJ	○	—		—	—	○	—				○			—	○		—	—	○	—	—	○	—	—	—	○	—		—	—	○		—	△	—	○
61	NQR70TU -5NVXYVJ	○	—		—	—	○	—				○			—	○		—	—	○	—	—	○	—	—	—	○	—		—	—	○		—	○	—	○
62	NPS71LU -5NVXYVJ	○	—		—	—	○	—				○			—	○		—	○	—	—	○	—	—	—	○	—	—		—	○	—		○	○	—	—
63	NPR58GL -5JXY	○	—		○	—	—	—				○			○	—		○	—	—	—	○	—	—	—	○	—	—		○	—	—		—	○	—	—
64	NPR66GDL-5LX	○	—		—	○	—	—				○			—	○		—	○	—	—	○	—	—	—	○	—	—		—	○	—		—	○	—	—
65	NPR66GL -5LXY	○	—		—	○	—	—				○			—	○		—	○	—	—	○	—	—	—	○	—	—		—	○	—		—	○	—	—
66	NPR66GL -5LXYR	○	—		—	○	—	—				○			—	○		—	○	—	—	○	—	—	—	○	—	—		—	○	—		—	○	—	—
67	NPR60GL -5DXYE	○	○		○	—	—	—				○			○	—		○	—	—	○	—	—	—	○	—	—	—		○	—	—		○	○	—	—
68	NPR58LL -5JXA	○	—		○	—	—	—				○			○	—		○	—	—	—	○	—	—	—	○	—	—		○	—	—		—	○	—	—
69	NPR58LL -5JXY	○	—		○	—	—	—				○			○	—		○	—	—	—	○	—	—	—	○	—	—		○	—	—		—	○	—	—
70	NPR58LL -5JXAC	○	—		○	—	—	—				○			○	—		○	—	—	—	○	—	—	—	○	—	—		○	—	—		—	○	—	—
71	NPR58LL -5JXYC	○	—		○	—	—	—				○			○	—		○	—	—	—	○	—	—	—	○	—	—		○	—	—		—	○	—	—
72	NPR58LL -5JXAS	○	—		○	—	—	—				○			○	—		○	—	—	—	○	—	—	—	○	—	—		○	—	—		—	○	—	—
73	NPR58LL -5JXYS	○	—		○	—	—	—				○			○	—		○	—	—	—	○	—	—	—	○	—	—		○	—	—		—	○	—	—
74	NPR66LL -5JXYR	○	—		○	—	—	—				○			○	—		○	—	—	—	○	—	—	—	○	—	—		○	—	—		—	○	—	—
75	NPR66LBL-5JVXY	○	—		○	—	—	—				○			○	—		○	—	—	—	○	—	—	—	○	—	—		○	—	—		—	○	—	—
76	NPR66LL -5LXA	○	—			○	—	—				○			—	○		—	○	—	—	○	—	—	—	○	—	—		—	○	—		—	○	—	—
77	NPR66LL -5LXY	○	—			○	—	—				○			—	○		—	○	—	—	○	—	—	—	○	—	—		—	○	—		—	○	—	—

FRONT BRAKES (NPR·NQR 1998)

—	Not available
○	Standard
△	Factory option
	Non

		FRONT BRAKE																									
		DISC BRAKE										DRUM BRAKE															
		WHEEL CYL.			DISC					PAD		Type		WHEEL CYL.				DRUM			LINING						
		Inside dia. (in)			Thickness (mm)		Outside dia. (mm)			Thickness (mm)		2L	D2L	Inside dia. (in)				Inside dia. (mm)			Thickness (mm)			Width (mm)			
		2+1/8	2+2	2+1/4	35	42	265	282	310	14.0	13.0			1+1/8	1+3/16	1+5/16	1+3/8	279.4	300	320	6.9	9.6	11.0	60	75	100	120
No.	Models	1	2	3	4	5	6	7	8	9	10	11	12	13	14	15	16	17	18	19	20	21	22	23	24	25	26
78	NPR66LL -5LY											○		—	○	—	—	—		○		—	○		—	○	—
79	NPR66LL -5LXAC											○		—	○	—	—	—		○		—	○		—	○	—
80	NPR66LL -5LXYC											○		—	○	—	—	—		○		—	○		—	○	—
81	NPR66LL -5LXAS											○		—	○	—	—	—		○		—	○		—	○	—
82	NPR66LL -5LXYA											○		—	○	—	—			○		—	○		—	○	—
83	NPR66LL -5LXYR											○		—	○	—	—			○		—	○		—	○	—
84	NPR66LL -5LXYG											○		—	○	—	—			○		—	○		—	○	—
85	NPR66LL -5LVXYBR											○		—	○	—	—			○		—	○		—	○	—
86	NQR71LL -5NVXY											○		—	○	○	△					—	○		—	—	○
87	NPR69LL -5DXYE	○			○			○		○																	
88	NPR69LL -5HXYE	○			○		○			○																	
89	NPR69LL -5HXYIS	○			○		○			○																	
91	NPR65LL -5JXYISJ	○			○		○			○																	
92	NPR65LL -5JXYISTJ	○			○		○			○																	
93	NPR65LL -5JXYEJ	○			○		○			○																	
94	NPR65LL -5LXYJ											○		—	○	—	—			○		—	○		—	○	—
95	NPR65LL -5LXYRJ											○		—	○	—	—			○		—	○		—	○	—
96	NPR65LL-5LVXYCLJ											○		—	○	—	—			○		—	○		—	○	—
97	NQR70LL -5LVXYEJ			○		○			○		○																
98	NQR70LL-5NVXYBRJ											○		—	—	○	—			○		—	—		—	—	○
99	NPR58PL -5JXA											○		○	—	—	—			○		○	—		○	—	—
100	NPR58PL -5JXY											○		○	—	—	—			○		○	—		○	—	—
101	NPR66PL -5JXYR											○		○	—	—	—			○		○	—		○	—	—
102	NPR66PL -5JVXY											○		○	—	—	—			○		○					

REAR BRAKES (NPR-NQR 1998)

—	Not available
○	Standard
△	Factory option
	Non

		REAR BRAKE																				PARKING BRAKE								BRAKE CONTROL								
		DRUM BRAKE																																				
		TYPE		WHEEL CYL.					DRUM				LINING									DRUM				LINING				MASTER CYL.								
				Inside dia. (in)					Inside dia. (mm)				Thickness (mm)				Width (mm)				Inside dia. (mm)				Width (mm)				Inside dia. (in)								
		D2L (W/O AUTO)	D2L (W AUTO)	7/8	1	1+3/16	1+5/16	1+3/8	228.6	279.4	300	320	4.9	6.0	9.6	11.0	60	75	100	120	178	190	203	254	35	45	50	60	1+1/16	1+1/8	1+1/4	1+3/8	DSPV	LSPV	EXHAUST BRAKE	HYDROMASTER	HBB
No.	Models	1	2	3	4	5	6	7	8	9	10	11	12	13	14	15	16	17	18	19	20	21	22	23	24	25	26	27	28	29	30	31	32	33	34	35	36
78	NPR66LL -5LY	○	—		—	○	—	—				○			—	○		—	○	—	—	○	—	—	—	○	—	—		—	○	—		—	○	—	—
79	NPR66LL -5LXAC	○	—		—	○	—	—				○			—	○		—	○	—	—	○	—	—	—	○	—	—		—	○	—		—	○	—	—
80	NPR66LL -5LXYC	○	—		—	○	—	—				○			—	○		—	○	—	—	○	—	—	—	○	—	—		—	○	—		—	○	—	—
81	NPR66LL -5LXAS	○	—		—	○	—	—				○			—	○		—	○	—	—	○	—	—	—	○	—	—		—	○	—		—	○	—	—
82	NPR66LL -5LXYA	○	—		—	○	—	—				○			—	○		—	○	—	—	○	—	—	—	○	—	—		—	○	—		—	○	—	—
83	NPR66LL -5LXYR	○	—		—	○	—	—				○			—	○		—	○	—	—	○	—	—	—	○	—	—		—	○	—		—	○	—	—
84	NPR66LL -5LXYG	○	—		—	○	—	—				○			—	○		—	○	—	—	○	—	—	—	○	—	—		—	○	—		—	○	—	—
85	NPR66LL -5LVXYBR	○	—		—	○	—	—				○			—	○		—	○	—	—	○	—	—	—	○	—	—		—	○	—		○	○	—	—
86	NQR71LL -5NVXY	○	—		—	—	○	△				○			—	○		—	—	○	—	○	—	—	—	○	—	—		—	○	△		—	○	△	—
87	NPR69LL -5DXYE	○	○		○	—	—	—				○			○	—		○	—	—	○	—	—	—	○	—	—	—		○	—	—		○	○	—	—
88	NPR69LL -5HXYE	○	○		○	—	—	—				○			○	—		○	—	—	○	—	—	—	○	—	—	—		○	—	—		○	○	—	—
89	NPR69LL -5HXYIS	○	○		○	—	—	—				○			○	—		○	—	—	○	—	—	—	○	—	—	—		○	—	—		○	○	—	—
91	NPR65LL -5JXYISJ	○	○		—	○	—	—				○			—	○		—	○	—	—	○	—	—	—	○	—	—		—	○	—		○	○	—	—
92	NPR65LL -5JXYISTJ	○	○		—	○	—	—				○			—	○		—	○	—	—	○	—	—	—	○	—	—		—	○	—		○	○	—	—
93	NPR65LL -5JXYEJ	○	○		—	○	—	—				○			—	○		—	○	—	—	○	—	—	—	○	—	—		—	○	—		○	○	—	—
94	NPR65LL -5LXYJ	○	—		—	○	—	—				○			—	○		—	○	—	—	○	—	—	—	○	—	—		—	○	—		—	○	—	—
95	NPR65LL -5LXYRJ	○	—		—	○	—	—				○			—	○		—	○	—	—	○	—	—	—	○	—	—		—	○	—		—	○	—	—
96	NPR65LL-5LVXYCLJ	○	—		—	○	—	—				○			—	○		—	○	—	—	○	—	—	—	○	—	—		—	○	—		—	○	—	—
97	NQR70LL -5LVXYEJ	○	○		—	—	○	—				○			—	○		—	—	○	—	—	—	○	—	—	—	○		—	—	○		○	○	—	○
98	NQR70LL-5NVXYBRJ	○	—		—	—	○	—				○			—	○		—	—	○	—	—	—	○	—	—	—	○		—	—	○		○	○	—	○
99	NPR58PL -5JXA	○	—		○	—	—	—				○			○	—		○	—	—	—	○	—	—	—	○	—	—		○	—	—		—	○	—	—
100	NPR58PL -5JXY	○	—		○	—	—	—				○			○	—		○	—	—	—	○	—	—	—	○	—	—		○	—	—		—	○	—	—
101	NPR66PL -5JXYR	○	—		○	—	—	—				○			○	—		○	—	—	—	○	—	—	—	○	—	—		○	—	—		—	○	—	—
102	NPR66PL -5JVXY	○	—		○	—	—	—				○			○	—		○	—	—	—	○	—	—	—	○	—	—		○	—	—		—	○	—	—

FRONT BRAKES (NPR·NQR 1998)

—	Not available
○	Standard
△	Factory option
	Non

		FRONT BRAKE																									
		DISC BRAKE										DRUM BRAKE															
		WHEEL CYL.			DISC					PAD		Type		WHEEL CYL.				DRUM			LINING						
		Inside dia. (in)			Thickness (mm)		Outside dia. (mm)			Thickness (mm)		2L	D2L	Inside dia. (in)				Inside dia. (mm)			Thickness (mm)			Width (mm)			
		2+1/8	2+2	2+1/4	35	42	265	282	310	14.0	13.0			1+1/8	1+3/16	1+5/16	1+3/8	279.4	300	320	6.9	9.6	11.0	60	75	100	120
No.	Models	1	2	3	4	5	6	7	8	9	10	11	12	13	14	15	16	17	18	19	20	21	22	23	24	25	26
103	NPR66PL -5LXA											○		—	○	—	—			○		—	○		—	○	—
104	NPR66PL -5LXY											○		—	○	—	—			○		—	○		—	○	—
105	NPR66PL -5LXAC											○		—	○	—	—			○		—	○		—	○	—
106	NPR66PL -5LXYC											○		—	○	—	—			○		—	○		—	○	—
107	NPR66PL -5LXAS											○		—	○	—	—			○		—	○		—	○	—
108	NPR66PL -5LXYS											○		—	○	—	—			○		—	○		—	○	—
109	NPR66PL -5LXYR											○		—	○	—	—			○		—	○		—	○	—
110	NPR66PL -5LVXYBR											○		—	○	—	—			○		—	○		—	○	—
111	NQR66PL -5NVXA											○		—	—	○	△			○		—	○		—	—	○
112	NQR71PL -5NVXY											○		—	—	○	△			○		—	○		—	—	○
113	NPR65PL -5JXYEJ	○			○			○		○																	
114	NPR65PL -5JXYISJ	○			○			○		○																	
116	NPR65PL -5JXYISTJ	○			○			○		○																	
117	NPR65PL -5JXYJ											○		—	○	—	—						○		—	○	—
118	NPR65PL -5LXYRJ											○		—	○	—	—			○			○		—	○	—
119	NPR65PL-5LVXYCLJ											○		—	○	—	—			○			○		—	○	—
120	NQR70PL -5LVXYEJ			○		○					○																
121	NQR70PL-5NVXYBRJ											○		—	—	○	—			○			○		—	—	○
122	NQR70PL-5NVXYCLJ											○		—	—	○	—			○			○		—	—	○
123	NQR70PL -5NVXYRJ											○		—	—	○	—			○			○		—	—	○
124	NPR58LL -5HWYC																										
125	NQR71RL -5NVXY											○			—	○	△			○			○		—	—	○
126	NQR70TL -5LVXYEJ			○		○					○																
127	NQR70TL-5NVXYISJ			○		○					○																

REAR BRAKES (NPR·NQR 1998)

—	Not available
○	Standard
△	Factory option
	Non

		REAR BRAKE																			PARKING BRAKE								BRAKE CONTROL								
		DRUM BRAKE																																			
		TYPE		WHEEL CYL.					DRUM				LINING								DRUM				LINING				MASTER CYL.								
				Inside dia. (in)					Inside dia. (mm)				Thickness (mm)				Width (mm)				Inside dia. (mm)				Width (mm)				Inside dia. (in)								
		D2L (W/O AUTO)	D2L (W AUTO)	7/8	1	1+3/16	1+5/16	1+3/8	228.6	279.4	300	320	4.9	6.0	9.6	11.0	60	75	100	120	178	190	203	254	35	45	50	60	1+1/16	1+1/8	1+1/4	1+3/8	DSPV	LSPV	EXHAUST BRAKE	HYDROMASTER	HBB
No.	Models	1	2		4	5	6	7	8	9	10	11	12	13	14	15	16	17	18	19	20	21	22	23	24	25	26	27	28	29	30	31	32	33	34	35	36
103	NPR66PL -5LXA	○	—		—	○	—	—				○			—	○		—	○	—	—	○	—	—	—	○	—	—		—	○	—		—	○	—	—
104	NPR66PL -5LXY	○	—		—	○	—	—				○			—	○		—	○	—	—	○	—	—	—	○	—	—		—	○	—		—	○	—	—
105	NPR66PL -5LXAC	○	—		—	○	—	—				○			—	○		—	○	—	—	○	—	—	—	○	—	—		—	○	—		—	○	—	—
106	NPR66PL -5LXYC	○	—		—	○	—	—				○			—	○		—	○	—	—	○	—	—	—	○	—	—		—	○	—		—	○	—	—
107	NPR66PL -5LXAS	○	—		—	○	—	—				○			—	○		—	○	—	—	○	—	—	—	○	—	—		—	○	—		—	○	—	—
108	NPR66PL -5LXYS	○	—		—	○	—	—				○			—	○		—	○	—	—	○	—	—	—	○	—	—		—	○	—		—	○	—	—
109	NPR66PL -5LXYR	○	—		—	○	—	—				○			—	○		—	○	—	—	○	—	—	—	○	—	—		—	○	—		—	○	—	—
110	NPR66PL -5LVXYBR	○	—		—	○	—	—				○			—	○		—	○	—	—	○	—	—	—	○	—	—		—	○	—		○	○	—	—
111	NQR66PL -5NVXA	○	—		—	—	○	—				○			—	○		—	—	○	—	○	—	—	—	○	—	—		—	○	△		—	○	△	—
112	NQR71PL -5NVXY	○	—		—	—	○	△				○			—	○		—	—	○	—	○	—	—	—	○	—	—		—	○	△		—	○	△	—
113	NPR65PL -5JXYEJ	○	○		—	○	—	—				○			—	○		—	○	—	—	○	—	—	—	○	—	—		—	○	—		○	○	—	—
114	NPR65PL -5JXYISJ	○	○		—	○	—	—				○			—	○		—	○	—	—	○	—	—	—	○	—	—		—	○	—		○	○	—	—
116	NPR65PL -5JXYISTJ	○	○		—	○	—	—				○			—	○		—	○	—	—	○	—	—	—	○	—	—		—	○	—		○	○	—	—
117	NPR65PL -5JXYJ	○	—		—	○	—	—				○			—	○		—	○	—	—	○	—	—	—	○	—	—		—	○	—		—	○	—	—
118	NPR65PL -5LXYRJ	○	—		—	○	—	—				○			—	○		—	○	—	—	○	—	—	—	○	—	—		—	○	—		—	○	—	—
119	NPR65PL-5LVXYCLJ	○	—		—	○	—	—				○			—	○		—	○	—	—	○	—	—	—	○	—	—		—	○	—		—	○	—	—
120	NQR70PL -5LVXYEJ	○	—		—	—	○	—				○			—	○		—	—	○	—	—	—	○	—	—	—	○		—	—	○		○	○	—	○
121	NQR70PL-5NVXYBRJ	○	—		—	—	○	—				○			—	○		—	—	○	—	○	—	○	—	○	—	○		—	—	○		○	○	—	○
122	NQR70PL-5NVXYCLJ	○	—		—	—	○	—				○			—	○		—	—	○	—	—	○	—	—	—	○	—		—	—	○		—	○	—	○
123	NQR70PL -5NVXYRJ	○	—		—	—	○	—				○			—	○		—	—	○	—	—	○	—	—	—	○	—		—	—	○		—	○	—	○
124	NPR58LL -5HWYC																			—	—	○	—	—	—	○	—	—	—	○	—	—		—	○	—	—
125	NQR71RL -5NVXY	○	—		—	—	○	△				○			—	○		—	—	○	—	○	—	—	—	○	—	—	—	—	○	△		—	○	△	—
126	NQR70TL -5LVXYEJ	○	○		—	—	○	—				○			—	○		—	—	○	—	—	—	○	—	—	—	○		—	—	○		○	○	—	○
127	NQR70TL-5NVXYISJ	○	○		—	—	○	—				○			—	○		—	—	○	—	—	○	—	—	—	○	—		—	—	○		○	○	—	○

FRONT BRAKES (NPR·NQR 1998)

—	Not available
○	Standard
△	Factory option
	Non

		FRONT BRAKE																									
		DISC BRAKE										DRUM BRAKE															
		WHEEL CYL.			DISC					PAD		Type		WHEEL CYL.				DRUM			LINING						
		Inside dia. (in)			Thickness (mm)		Outside dia. (mm)			Thickness (mm)		2L	D2L	Inside dia. (in)				Inside dia. (mm)			Thickness (mm)			Width (mm)			
		2+1/8	2+2	2+1/4	35	42	265	282	310	14.0	13.0			1+1/8	1+3/16	1+5/16	1+3/8	279.4	300	320	6.9	9.6	11.0	60	75	100	120
No.	Models	1	2	3	4	5	6	7	8	9	10	11	12	13	14	15	16	17	18	19	20	21	22	23	24	25	26
128	NQR70TL-5NVXYBRJ											○				○				○			○				○
129	NQR70TL-5NVXYCLJ											○				○				○			○				○
130	NQR70TL-5NVXYRJ											○				○				○			○				○
	NPR70GU -5JVXYKJ											○	—	○	—		—			○		○	—		○	—	—
	NPR70GU -5LVXYKJ											○	—	—	○		—			○		—	○		—	○	—
	NPR66LU -5JXY											○		○	—		—			○		○	—		○	—	—
	NPR70PU -5JVXYKJ											○	—	○	—		—			○		○	—		○	—	—
	NPR70PU -5LVXYKJ											○	—	—	○		—			○		—	○		—	○	—
	NPR65LU -5HWYK											○	—	○	—		—			○		○	—		○	—	—
	NQR70RU -5NVXYVJ											○	—	—	—	○	—			○		—	○		—	—	○
	NQR70RU -5NVXYKJ											○	—	—	—	○	—			○		—	○		—	—	○
	NPR65LL -5DXYEJ	○			○		○			○																	
	NQR70PL-5NVXYGJ													—	—	○	—			○					—	—	○
	NPR65LL -5HWYISJ	○			○			○		○																	

REAR BRAKES (NPR·NQR 1998)

—	Not available
○	Standard
△	Factory option
	Non

		REAR BRAKE																			PARKING BRAKE								BRAKE CONTROL								
		DRUM BRAKE																																			
		TYPE		WHEEL CYL.					DRUM				LINING								DRUM				LINING				MASTER CYL.								
				Inside dia. (in)					Inside dia. (mm)				Thickness (mm)				Width (mm)				Inside dia. (mm)				Width (mm)				Inside dia. (in)								
		D2L (W/O AUTO)	D2L (W AUTO)	7/8	1	1+3/16	1+5/16	1+3/8	228.6	279.4	300	320	4.9	6.0	9.6	11.0	60	75	100	120	178	190	203	254	35	45	50	60	1+1/16	1+1/8	1+1/4	1+3/8	DSPV	LSPV	EXHAUST BRAKE	HYDROMASTER	HBB
No.	Models	1	2	3	4	5	6	7	8	9	10	11	12	13	14	15	16	17	18	19	20	21	22	23	24	25	26	27	28	29	30	31	32	33	34	35	36
127	NQR70TL-5NVXYBRJ	○	—		—		○	—				○			—	○		—	—	○	—	—	—	○	—	—	—	○		—	—	○		○	○	—	○
128	NQR70TL-5NVXYCLJ	○	—		—	—	○	—				○			—	○		—	—	○	—	—	○	—	—	—	○	—		—	—	○		—	○	—	○
129	NQR70TL-5NVXYRJ	○	—		—	—	○	—				○			—	○		—	—	○	—	—	○	—	—	—	○	—		—	—	○		—	○	—	○
130	NPR70GU -5JVXYKJ	○	—		○	—	—	—				○			○	—		○	—	—	—	—	○	—	—	—	○	—		○	—	—		—		—	—
	NPR70GU -5LVXYKJ	○	—		—	○	—	—				○			—	○		—	○	—	—	—	○	—	—	—	○	—		—	○	—		—		—	—
	NPR66LU -5JXY	○	—		○	○	—	—				○			○	—		○	—	—			—	—	—	○	—	—		○	—	—		—	○	—	—
	NPR70PU -5JVXYKJ	○	—		○	—	—	—				○			○	—		○	—	—	—	—	○	—	—	—	○	—		○	—	—		—		—	—
	NPR70PU -5LVXYKJ	○	—		—	—	—	—				○			—	○		—	○	—	—	—	○	—	—	—	○	—		—	○	—		—		—	—
	NPR65LU -5HWYK	○	—		○	○	—	—				○			○	—		○	—	—	—	○	—	—	—	○	—	—		○	—	—		—		—	—
	NQR70RU -5NVXYVJ	○	—		—	—	○	—				○			—	○		—	—	○	—	—	○	—	—	—	○	—		—	—	○		—	○	—	○
	NQR70RU -5NVXYKJ	○	—		—	—	○	—				○			—	○		—	—	○	—	—	○	—	—	—	○	—		—	—	○		—		—	○
	NPR65LL -5DXYEJ	○	○		○	—	—	—				○			○	—		○	—	—	—	○	—	—	—	○	—	—		○	—	—		○	○	—	—
	NQR70PL -5NVXYGJ	○	—		—	—	○	—				○			—	○		—	—	—	—	—	○	—	—	—	○	—		—	—	○		—	○	—	—
	NPR65LL -5HWYISJ	○	○		—	○	—	—				○			—	○		—	○	○	—	○	—	—	—	○	—	—		—	○	—		○	○	—	—

FRONT BRAKES (NHR 1999)

—	Not available
○	Standard
△	Factory option
	Non

		FRONT BRAKE																									
		DISC BRAKE											DRUM BRAKE														
		WHEEL CYL.			DISC						PAD		Type		WHEEL CYL.			DRUM.			LINING						
		Inside dia. (in)			Thickness (mm)			Outside dia. (mm)			Thickness (mm)				Inside dia. (in)			Inside dia. (mm)			Thickness (mm)			Width (mm)			
		2 + 1/8	2 + 2	2 + 1/4	35	40	42	265	293	310	14.0	13.0	2L	D2L	1 + 1/8	1 + 3/16	1 + 3/8	279.4	300	320	6.0	9.6	11.0	60	75	100	120
No.	Models	1	2	3	4	5	6	7	8	9	10	11	12	13	14	15	16	17	18	19	20	21	22	23	24	25	26
1	NHR55EU-1CB												○		○			○			○			○			
2	NHR55EU-1CY												○		○			○			○			○			
3	NHR55EU-1CYIN												○		○			○			○			○			
4	NHR69EU-1CBK												○		○			○			○			○			
5	NHR69EU-1CYK												○		○			○			○			○			
6	NHR55EU-1BWS												○		○			○			○			○			
7	NHR69EU-1BWSSN												○		○			○			○			○			
8	NHR69EU-1BWSK												○		○			○			○			○			
9	NHR55EU-3CB												○		○			○			○			○			
10	NHR69EU-3CBSN												○		○			○			○			○			
11	NHR69EU-3CBK												○		○			○			○			○			
12	NHR55EL-1CBS												○		○			○			○			○			
13	NHR55EL-1CY												○		○			○			○			○			
14	NHR55EL-1BWS												○		○			○			○			○			
15	NHR55EL-3CBS												○		○			○			○			○			
16	NHR55EL-3CYS												○		○			○			○			○			
17	NHR55EL-3CB												○		○			○			○			○			
18	NHR55EL-1CYS												○		○			○			○			○			
19	NHR55EL-1CYCL												○		○			○			○			○			

REAR BRAKES (NHR 1999)

—	Not available
○	Standard
△	Factory option
	Non

		REAR BRAKE																			PARKING BRAKE								BRAKE CONTROL								
		DRUM BRAKE																																			
		TYPE		WHEEL CYL.					DRUM				LINING								DRUM				LINING				MASTER CYL.								
				Inside dia. (in)					Inside dia. (mm)				Thickness (mm)				Width (mm)				Inside dia. (mm)				Width (mm)				Inside dia. (in)								
		D2L (W/O AUTO)	D2L (W AUTO)	7/8	1	1+3/16	1+5/16	1+3/8	228.6	279.4	300	320	4.9	6.0	9.6	11.0	60	75	100	120	178	190	203	254	35	45	50	60	1+1/16	1+1/8	1+1/4	1+3/8	DSPV	LSPV	EXHAUST BRAKE	HYDROMASTER	HBB
No.	Models	1	2	3	4	5	6	7	8	9	10	11	12	13	14	15	16	17	18	19	20	21	22	23	24	25	26	27	28	29	30	31	32	33	34	35	36
1	NHR55EU-1CB	○		○					—	○				○			○	—			○				○				○				△		△		
2	NHR55EU-1CY	○		○					—	○				○			○	—			○				○				○				—		△		
3	NHR55EU-1CYIN	○		○					—	○				○			○	—			○				○				○				—		△		
4	NHR69EU-1CBK	○		○					—	○				○			○	—			○				○				○				△		△		
5	NHR69EU-1CYK	○		○					—	○				○			○	—			○				○				○				—		△		
6	NHR55EU-1BWS	○		○					—	○				○			○	—			○				○				○				△		△		
7	NHR69EU-1BWSSN	○		○					—	○				○			○	—			○				○				○				△		△		
8	NHR69EU-1BWSK	○		○					—	○				○			○	—			○				○				○				△		△		
9	NHR55EU-3CB	○		○					○	—			○				—	○			○				○				○				△		△		
10	NHR69EU-3CBSN	○		○					○	—			○				—	○			○				○				○				△		△		
11	NHR69EU-3CBK	○		○					○	—			○				—	○			○				○				○				△		△		
12	NHR55EL-1CBS	○		○					—	○				○			○	—			○				○				○				△		△		
13	NHR55EL-1CY	○		○					—	○				○			○	—			○				○				○				—		△		
14	NHR55EL-1BWS	○		○					—	○				○			○	—			○				○				○				△		△		
15	NHR55EL-3CBS	○		○					○	—				○			—	○			○				○				○				△		△		
16	NHR55EL-3CYS	○		○					○	—				○			—	○			○				○				○				—		△		
17	NHR55EL-3CB	○		○					○	—			○				—	○			○				○				○				△		△		
18	NHR55EL-1CYS	○		○					—	○			○				○	—			○				○				○				—		△		
19	NHR55EL-1CYCL	○		○					—	○			○				○	—			○				○				○				—		△		

FRONT BRAKES (NKR 1999)

—	Not available
○	Standard
△	Factory option
	Non

		FRONT BRAKE																					
		DISC BRAKE									DRUM BRAKE												
		WHEEL CYL.			DISC						Type		WHEEL CYL.			DRUM.			LINING			
		Inside dia. (in)			Thickness (mm)			Outside dia. (mm)			2L	D2L	Inside dia. (in)			Inside dia. (mm)			Width (mm)			
		2+1/8	2+2	2+1/4	35	40	42	265	293	310			1+1/8	1+3/16	1+3/8	279.4	300	320	60	75	100	120
No.	Models	1	2	3	4	5	6	7	8	9	10	11	12	13	14	15	16	17	18	19	20	21
1	NKR55EU-1EXY	—	—		—	—		—	—		○	—	○	—			○	—		○		
2	NKR55EU-1EXA	—	—		—	—		—	—		○	—	○	—			○	—		○		
3	NKR55EU-1EXYP	—	—		—	—		—	—		○	—	○	—			○	—		○		
4	NKR55EU-1EXYJ	—	—		—	—		—	—		○	—	○	—			○	—		○		
5	NKR69EAU-1DXYUK	—	○		○	—		○	—		—	—	—	—			—	—		—		
*6	NKR55EAU-1DXYUKJ	—	○		○	—		○	—		—	—	—	—			—	—		—		
*7	NKR66EU-1EXY2	—	—		—	—		—	—		○	—	○	—			○	—		○		
8	NKR66EU-1EXYH	—	—		—	—		—	—		○	—	○	—			○	—		○		
9	NKR55EU-1DWY	—	—		—	—		—	—		○	—	○	—			○	—		○		
10	NKR55EU-1DWS	—	—		—	—		—	—		○	—	○	—			○	—		○		
11	NKR55E2U-5HXY	—	—		—	—		—	—		○	—	○	—			○	—		○		
12	NKR55E2U-5HXYP	—	—		—	—		—	—		○	—	○	—			○	—		○		
13	NKR69E2U-5HYK	—	—		—	—		—	—		○	—	○	—			○	—		○		
*14	NKR66E2U-5HXY2	—	—		—	—		—	—		○	—	○	—			○	—		○		
*15	NKR66EDU-5EMXD2	—	—		—	—		—	—		—	○	○	—			○	—		○		
16	NKR66E2U-5EXYH	—	—		—	—		—	—		○	—	○	—			—	○		○		
*17	NKR66LU-5EXYH	—	—		—	—		—	—		○	—	○	—			—	○		○		
18	NKR55LU-5HXY	—	—		—	—		—	—		○	—	○	—			○	—		○		
19	NKR55LU-5HXA	—	—		—	—		—	—		○	—	○	—			○	—		○		
20	NKR55LU-5HXYJ	—	—		—	—		—	—		○	—	○	—			○	—		○		
21	NKR55LU-5HXYZJ	—	—		—	—		—	—		○	—	○	—			○	—		○		
22	NKR69LU-5HYK	—	—		—	—		—	—		○	—	○	—			○	—		○		
*23	NKR66LU-5HXY2	—	—		—	—		—	—		○	—	○	—			○	—		○		
*24	NKR66LU-5HXA2	—	—		—	—		—	—		○	—	○	—			○	—		○		

REAR BRAKES (NKR 1999)

—	Not available
○	Standard
△	Factory option
	Non

		REAR BRAKE															PARKING BRAKE								BRAKE CONTROL								
		DRUM BRAKE																															
		Type		WHEEL CYL.					DRUM.				LINING				DRUM				LINING				MASTER CYL.								
				Inside dia. (in)					Inside dia. (mm)				Width (mm)				Inside dia. (mm)				Width (mm)				Inside dia. (in)								
No.	Models	D2L (W/O AUTO)	D2L (W AUTO)	7/8	1	1+3/16	1+5/16	1+3/8	228.6	279.4	300	320	60	75	100	120	178	190	203	254	35	45	50	60	1+1/16	1+1/8	1+1/4	1+3/8	DSPV	LSPV	EXHAUST BRAKE	HYDROMASTER	HBB
		1	2	3	4	5	6	7	8	9	10	11	12	13	14	15	16	17	18	19	20	21	22	23	24	25	26	27	28	29	30	31	32
1	NKR55EU-1EXY	○	—	○	—	—			—		○	—		○	—		○	—			○	—				○			—	—	△		
2	NKR55EU-1EXA	○	—	○	—	—			—		○	—		○	—		○	—			○	—				○			△	—	△		
3	NKR55EU-1EXYP	○	—	○	—	—			—		○	—		○	—		○	—			○	—				○			—	—	△		
4	NKR55EU-1EXYJ	○	—	○	—	—			—		○	—		○	—		○	—			○	—				○			—	—	△		
5	NKR69EAU-1DXYUK	—	○	—	○	—			—		○	—		○	—		○	—			○	—				○			—	○	○		
*6	NKR55EAU-1DXYUKJ	—	○	—	○	—			—		○	—		○	—		○	—			○	—				○			—	○	○		
*7	NKR66EU-1EXY2	○	—	○	—	—			—		○	—		○	—		—	○			—	○				○			—	—	△		
8	NKR66EU-1EXYH	○	—	○	—	—			—		○	—		○	—		—	○			—	○				○			—	○	△		
9	NKR55EU-1DWY	○	—	○	—	—			—		○	—		○	—		○	—			○	—				○			—	—	△		
10	NKR55EU-1DWS	○	—	○	—	—			—		○	—		○	—		○	—			○	—				○			△	—	△		
11	NKR55E2U-5HXY	○	—	—	○	—			—		○	—		○	—		○	—			○	—				○			—	—	△		
12	NKR55E2U-5HXYP	○	—	—	○	—			—		○	—		○	—		○	—			○	—				○			—	—	△		
13	NKR69E2U-5HYK	○	—	—	○	—			—		○	—		○	—		○	—			○	—				○			—	—	△		
*14	NKR66E2U-5HXY2	○	—	—	○	—			—		○	—		○	—		—	○			—	○				○			—	—	△		
*15	NKR66EDU-5EMXD2	○	—	—	○	—			—		○	—		○	—		—	○			—	○				○			—	—	△		
16	NKR66E2U-5EXYH	○	—	—	○	—			—		—	○		○	—		—	○			—	○				○			—	○	△		
*17	NKR66LU-5EXYH	○	—	—	○	—			—		—	○		○	—		—	○			—	○				○			—	○	△		
18	NKR55LU-5HXY	○	—	—	○	—			—		○	—		○	—		○	—			○	—				○			—	—	△		
19	NKR55LU-5HXA	○	—	—	○	—			—		○	—		○	—		○	—			○	—				○			—	—	△		
20	NKR55LU-5HXYJ	○	—	—	○	—			—		○	—		○	—		○	—			○	—				○			—	—	△		
21	NKR55LU-5HXYZJ	○	—	—	○	—			—		○	—		○	—		○	—			○	—				○			○	—	△		
22	NKR69LU-5HYK	○	—	—	○	—			—		○	—		○	—		○	—			○	—				○			—	—	△		
*23	NKR66LU-5HXY2	○	—	—	○	—			—		○	—		○	—		—	○			—	○				○			—	—	△		
*24	NKR66LU-5HXA2	○	—	—	○	—			—		○	—		○	—		—	○			—	○				○			—	—	△		

FRONT BRAKES (NKR 1999)

—	Not available
○	Standard
△	Factory option
	Non

		FRONT BRAKE																				
		DISC BRAKE									DRUM BRAKE											
		WHEEL CYL.			DISC						Type		WHEEL CYL.			DRUM.			LINING			
		Inside dia. (in)			Thickness (mm)			Outside dia. (mm)					Inside dia. (in)			Inside dia. (mm)			Width (mm)			
		2+1/8	2+2	2+1/4	35	40	42	265	293	310	2L	D2L	1+1/8	1+3/16	1+3/8	279.4	300	320	60	75	100	120
No.	Models	1	2	3	4	5	6	7	8	9	10	11	12	13	14	15	16	17	18	19	20	21
*25	NKR66LU-5HYIN2	—	—		—	—		—			○	—	○	—			—	○		○	—	
26	NKR66LU-5LXYP	—	—		—	—		—			○	—	—	○			—	○		○	—	
27	NKR66LU-5LYIN	—	—		—	—		—			○	—	—	○			—	○		—	○	
28	NKR69LU-5GWYK	—	—		—	—		—			○	—	○	—			○	—		○	—	
*29	NKR66LU-5GWY2	—	—		—	—		—			○	—	○	—			○	—		○	—	
30	NKR55EU-3EXY	—	—		—	—		—			○	—	○	—			○	—		○	—	
31	NKR66EU-3EXYH	—	—		—	—		—			○	—	○	—			○	—		○	—	
32	NKR55EL-1EY	—	—		—	—		—			○	—	○	—			○	—		○	—	
33	NKR55EL-1EXY	—	—		—	—		—			○	—	○	—			○	—		○	—	
34	NKR55EL-1EXA	—	—		—	—		—			○	—	○	—			○	—		○	—	
35	NKR55EL-1EXYG	—	—		—	—		—			○	—	○	—			○	—		○	—	
36	NKR55EL-1EAC	—	—		—	—		—			○	—	○	—			○	—		○	—	
37	NKR55EL-1EXYJ	—	—		—	—		—			○	—	○	—			○	—		○	—	
38	NKR69EL-1EXYR	—	—		—	—		—			○	—	○	—			○	—		○	—	
39	NKR69EAL-1DXYE	—	○		○	—		○			—	—	—	—			—	—		—	—	
40	NKR55EAL-1DXYEJ	—	○		○	—		○			—	—	—	—			—	—		—	—	
*41	NKR69EAL-1DXYBR	—	○		○	—		○			—	—	—	—			—	—		—	—	
*42	NKR66EL-1EXY2	—	—		—	—		—			○	—	○	—			○	—		○	—	
*43	NKR55EL-1DWSC	—	—		—	—		—			○	—	○	—			○	—		○	—	
44	NKR55E2L-5HXY	—	—		—	—		—			○	—	○	—			○	—		○	—	
45	NKR55E2L-5HXYG	—	—		—	—		—			○	—	○	—			○	—		○	—	
46	NKR55E2L-5HXYCL	—	—		—	—		—			○	—	○	—			○	—		○	—	
47	NKR66E2L-5HXY2	—	—		—	—		—			○	—	○	—			○	—		○	—	
48	NKR66E2L-5HXA2	—	—		—	—		—			○	—	○	—			○	—		○	—	

REAR BRAKES (NKR 1999)

—	Not available
○	Standard
△	Factory option
	Non

		REAR BRAKE															PARKING BRAKE								BRAKE CONTROL								
		DRUM BRAKE																															
		Type		WHEEL CYL.					DRUM.				LINING				DRUM				LINING				MASTER CYL.								
				Inside dia. (in)					Inside dia. (mm)				Width (mm)				Inside dia. (mm)				Width (mm)				Inside dia. (in)								
		D2L (W/O AUTO)	D2L (W AUTO)	7/8	1	1+3/16	1+5/16	1+3/8	228.6	279.4	300	320	60	75	100	120	178	190	203	254	35	45	50	60	1+1/16	1+1/8	1+1/4	1+3/8	DSPV	LSPV	EXHAUST BRAKE	HYDROMASTER	HBB
No.	Models	1	2	3	4	5	6	7	8	9	10	11	12	13	14	15	16	17	18	19	20	21	22	23	24	25	26	27	28	29	30	31	32
*25	NKR66LU-5HYIN2	○	—	—	○	—			—		—	○		○	—		—	○			—	○				○			—	—	△		
26	NKR66LU-5LXYP	○	—	—	—	○			—		—	○		○	—			○			—	○				—	○		—	—	△		
27	NKR66LU-5LYIN	○	—	—	—	○			—		—	○		—	○			○			—	○				—	○		—	—	△		
28	NKR69LU-5GWYK	○	—	—	○	—			—		○	—		○	—		○	—			○	—				○			—	—	△		
*29	NKR66LU-5GWY2	○	—	—	○	—			—		○	—		○	—		—	○			—	○				○			—	—	△		
30	NKR55EU-3EXY	○	—	—	○	—			○		—	—		○	—		○	—			○	—				○			—	—	△		
31	NKR66EU-3EXYH	○	—	—	○	—			○		—	—		○	—		—	○			—	○				○			—	○	△		
32	NKR55EL-1EY	○	—	○	—	—			—		○	—		○	—		○	—			○	—				○			—	—	△		
33	NKR55EL-1EXY	○	—	○	—	—			—		○	—		○	—		○	—			○	—				○			—	—	△		
34	NKR55EL-1EXA	○	—	○	—	—			—		○	—		○	—		○	—			○	—				○			△	—	△		
35	NKR55EL-1EXYG	○	—	○	—	—			—		○	—		○	—		○	—			○	—				○			—	—	△		
36	NKR55EL-1EAC	○	—	—	○	—			—		○	—		○	—		○	—			○	—				○			○	—	○		
37	NKR55EL-1EXYJ	○	—	○	—	—			—		○	—		○	—		○	—			○	—				○			—	—	△		
38	NKR69EL-1EXYR	○	—	○	—	—			—		○	—		○	—		○	—			○	—				○			—	—	△		
39	NKR69EAL-1DXYE	—	○	—	○	—			—		○	—		○	—		○	—			○	—				○			—	○	○		
40	NKR55EAL-1DXYEJ	—	○	—	○	—			—		○	—		○	—		○	—			○	—				○			—	○	○		
*41	NKR69EAL-1DXYBR	—	○	—	○	—			—		○	—		○	—		○	—			○	—				○			—	○	△		
*42	NKR66EL-1EXY2	○	—	○	—	—			—		○	—		○	—		—	○			—	○				○			—	—	△		
*43	NKR55EL-1DWSC	○	—	—	○	—			—		○	—		○	—		○	—			○	—				○			○	—	△		
44	NKR55E2L-5HXY	○	—	—	○	—			—		○	—		○	—		○	—			○	—				○			—	—	△		
45	NKR55E2L-5HXYG	○	—	—	○	—			—		○	—		○	—		○	—			○	—				○			—	—	△		
46	NKR55E2L-5HXYCL	○	—	—	○	—			—		○	—		○	—		○	—			○	—				○			—	—	△		
47	NKR66E2L-5HXY2	○	—	—	○	—			—		○	—		○	—		—	○			—	○				○			—	—	△		
48	NKR66E2L-5HXA2	○	—	—	○	—			—		○	—		○	—		—	○			—	○				○			△	—	△		

FRONT BRAKES (NKR 1998)

—	Not available
○	Standard
△	Factory option
	Non

		FRONT BRAKE																				
		DISC BRAKE									DRUM BRAKE											
		WHEEL CYL.			DISC						Type		WHEEL CYL.			DRUM.			LINING			
		Inside dia. (in)			Thickness (mm)			Outside dia. (mm)			2 L	D 2 L	Inside dia. (in)			Inside dia. (mm)			Width (mm)			
		2 + 1 / 8	2 + 2	2 + 1 / 4	3 5	4 0	4 2	2 6 5	2 9 3	3 1 0			1 + 1 / 8	1 + 3 / 16	1 + 3 / 8	2 7 9 . 4	3 0 0	3 2 0	6 0	7 5	1 0 0	1 2 0
No.	Models	1	2	3	4	5	6	7	8	9	10	11	12	13	14	15	16	17	18	19	20	21
*49	NKR66E2L-5HXYS2	—	—		—	—		—	—		○	—	○	—			○	—		○	—	
*50	NKR66E2L-5HXAS2	—	—		—	—		—	—		○	—	○	—			○	—		○	—	
*51	NKR66EDL-5EMXD2	—	—		—	—		—	—		—	○	○	—			○	—		○	—	
*52	NKR66EDL-5EMXDS2	—	—		—	—		—	—		—	○	○	—			○	—		○	—	
*53	NKR66E2L-5HXYR	—	—		—	—		—	—		○	—	○	—			—	○		○	—	
54	NKR66E2L-5HXFYR	—	—		—	—		—	—		○	—	○	—			—	○		○	—	
55	NKR66GL-5JXY2	—	—		—	—		—	—		○	—	○	—			—	○		○	—	
*56	NKR55LL-5EAC	—	—		—	—		—	—		○	—	○	—			○	—		○	—	
57	NKR55LL-5HXY	—	—		—	—		—	—		○	—	○	—			○	—		○	—	
58	NKR55LL-5HXA	—	—		—	—		—	—		○	—	○	—			○	—		○	—	
59	NKR55LL-5HAC	—	—		—	—		—	—				○	—			○	—		○	—	
60	NKR55LL-5HXYCLJ	—	—		—	—		—	—		○	—	○	—			○	—		○	—	
*61	NKR55LL-5HXYJ	—	—		—	—		—	—		○	—	○	—			○	—		○	—	
62	NKR55LL-5HACJ	—	—		—	—		—	—		○	—	○	—			○	—		○	—	
63	NKR55LL-5HXYCJ	—	—		—	—		—	—		○	—	○	—			○	—		○	—	
64	NKR55LL-5HXACJ	—	—		—	—		—	—		○	—	○	—			○	—		○	—	
65	NKR69LL-5DXYE	○	—		—	○		—	○		—	—	—	—			—	—		—	—	
66	NKR55LL-5DXYEJ	○	—		—	○		—	○		—	—	—	—			—	—		—	—	
*67	NKR69LL-5HXYE	○	—		—	○		—	○		—	—	—	—			—	—		—	—	
68	NKR55LL-5HXYEJ	○	—		—	○		—	○		—	—	—	—			—	—		—	—	
*69	NKR69LL-5HXYCH	—	—		—	—		—	—		○	—	○	—			○	—		○	—	
*70	NKR69LL-5HXYBR	—	—		—	—		—	—		○	—	○	—			—	○		○	—	
71	NKR66LL-5HXY2	—	—		—	—		—	—		○	—	○	—			—	—		○	—	
72	NKR66LL-5HXA2	—	—		—	—		—	—		○	—	○	—			—	—		○	—	

REAR BRAKES (NKR 1998)

—	Not available
○	Standard
△	Factory option
	Non

		REAR BRAKE															PARKING BRAKE								BRAKE CONTROL								
		DRUM BRAKE																															
		Type		WHEEL CYL.					DRUM.				LINING				DRUM				LINING				MASTER CYL.								
				Inside dia. (in)					Inside dia. (mm)				Width (mm)				Inside dia. (mm)				Width (mm)				Inside dia. (in)								
		D2L (W/O AUTO)	D2L (W AUTO)	7/8	1	1+3/16	1+5/16	1+3/8	228.6	279.4	300	320	60	75	100	120	178	190	203	254	35	45	50	60	1+1/16	1+1/8	1+1/4	1+3/8	DSPV	LSPV	EXHAUST BRAKE	HYDROMASTER	HBB
No.	Models	1	2	3	4	5	6	7	8	9	10	11	12	13	14	15	16	17	18	19	20	21	22	23	24	25	26	27	28	29	30	31	32
*49	NKR66E2L-5HXYS2	○	—	—	○	—			—		○	—		○	—		—	○			—	○				○			—	—	△		
*50	NKR66E2L-5HXAS2	○	—	—	○	—			—		○	—		○	—		—	○			—	○				○			△	—	△		
*51	NKR66EDL-5EMXD2	○	—	—	○	—			—		○	—		○	—		—	○			—	○				○			—	—	△		
*52	NKR66EDL-5EMXDS2	○	—	—	○	—			—		○	—		○	—		—	○			—	○				○			—	—	△		
*53	NKR66E2L-5HXYR	○	—	—	○	—			—		—	○		○	—		—	○			—	○				○			—	—	△		
54	NKR66E2L-5HXFYR	○	—	—	○	—			—		—	○		○	—		—	○			—	○				○			—	—	△		
55	NKR66GL-5JXY2	○	—	—	—	○			—		—	○		○	—		—	○			—	○				○			—	—	△		
*56	NKR55LL-5EAC	○	—	—	○	—			—		○	—		○	—		○	—			○	—				○			—	—	○		
57	NKR55LL-5HXY	○	—	—	○	—			—		○	—		○	—		○	—			○	—				○			—	—	△		
58	NKR55LL-5HXA	○	—	—	○	—			—		○	—		○	—		○	—			○	—				○			—	—	△		
59	NKR55LL-5HAC	○	—	—	○	—			—		○	—		○	—		○	—			○	—				○			—	—	○		
60	NKR55LL-5HXYCLJ	○	—	—	○	—			—		○	—		○	—		○	—			○	—				○			—	—	△		
*61	NKR55LL-5HXYJ	○	—	—	○	—			—		○	—		○	—		○	—			○	—				○			—	—	△		
62	NKR55LL-5HACJ	○	—	—	○	—			—		○	—		○	—		○	—			○	—				○			—	—	○		
63	NKR55LL-5HXYCJ	○	—	—	○	—			—		○	—		○	—		○	—			○	—				○			—	—	○		
64	NKR55LL-5HXACJ	○	—	—	○	—			—		○	—		○	—		○	—			○	—				○			—	—	○		
65	NKR69LL-5DXYE	—	○	—	○	—			—		—	○		○	—		○	—			○	—				○			—	○	○		
66	NKR55LL-5DXYEJ	—	○	—	○	—			—		—	○		○	—		○	—			○	—				○			—	○	○		
*67	NKR69LL-5HXYE	—	○	—	○	—			—		—	○		○	—		○	—			○	—				○			—	○	○		
68	NKR55LL-5HXYEJ	—	○	—	○	—			—		—	○		○	—		○	—			○	—				○			—	○	○		
*69	NKR69LL-5HXYCH	○	—	—	○	—			—		○	—		○	—		○	—			○	—				○			—	—	△		
*70	NKR69LL-5HXYBR	○	—	—	○	—			—		—	○		○	—		○	—			○	—				○			—	○	△		
71	NKR66LL-5HXY2	○	—	—	○	—			—		○	—		○	—		—	○			—	○				○			—	—	△		
72	NKR66LL-5HXA2	○	—	—	○	—			—		○	—		○	—		—	○			—	○				○			—	—	△		

FRONT BRAKES (NKR 1999)

—	Not available
○	Standard
△	Factory option
	Non

		FRONT BRAKE																					
		DISC BRAKE									DRUM BRAKE												
		WHEEL CYL.			DISC						Type		WHEEL CYL.			DRUM.			LINING			
		Inside dia. (in)			Thickness (mm)			Outside dia. (mm)			2 L	D 2 L	Inside dia. (in)			Inside dia. (mm)			Width (mm)			
		2 + 1 / 8	2 + 2	2 + 1 / 4	3 5	4 0	4 2	2 6 5	2 9 3	3 1 0			1 + 1 / 8	1 + 3 / 16	1 + 3 / 8	2 7 9 . 4	3 0 0	3 2 0	6 0	7 5	1 0 0	1 2 0
No.	Models	1	2	3	4	5	6	7	8	9	10	11	12	13	14	15	16	17	18	19	20	21
*73	NKR66LL-5HXYS2	—	—		—	—		—	—		○	—	○	—		○	—			○	—	
*74	NKR66LL-5HXAS2	—	—		—	—		—	—		○	—	○	—		○	—			○	—	
*75	NKR66LL-5HXYR	—	—		—	—		—	—		○	—	○	—		—	○			○	—	
*76	NKR66LL-5JXY2	—	—		—	—		—	—		○	—	○	—		—	○			○	—	
77	NKR55LL-5GWAC	—	—		—	—		—	—		○	—	○	—		○	—			○	—	
78	NKR66LL-5GWYS2	—	—		—	—		—	—		○	—	○	—		○	—			○	—	
*79	NKR55EL-3EXY	—	—		—	—		—	—		○	—	○	—		○	—			○	—	
80	NKR69EL-3EXYR	—	—		—	—		—	—		○	—	○	—		○	—			○	—	
81	NKR66LL-5HXY	—	—		—	—		—	—		○	—	○	—		—	○			○	—	
82	NKR55LL-5HXYCHJ	—	—		—	—		—	—		○	—	○	—		○	—			○	—	
*83	NKR69EL-1EXYCH	—	—		—	—		—	—		○	—	○	—		○	—			○	—	
84	NKR66LL-5GWY2	—	—		—	—		—	—		○	—	○	—		○	—			○	—	

REAR BRAKES (NKR 1999)

—	Not available
○	Standard
△	Factory option
	Non

		REAR BRAKE															PARKING BRAKE								BRAKE CONTROL								
		DRUM BRAKE																															
		Type		WHEEL CYL.					DRUM.				LINING				DRUM				LINING				MASTER CYL.								
				Inside dia. (in)					Inside dia. (mm)				Width (mm)				Inside dia. (mm)				Width (mm)				Inside dia. (in)								
		D2L (W/O AUTO)	D2L (W AUTO)	7/8	1	1+3/16	1+5/16	1+3/8	228.6	279.4	300	320	60	75	100	120	178	190	203	254	35	45	50	60	1+1/16	1+1/8	1+1/4	1+3/8	DSPV	LSPV	EXHAUST BRAKE	HYDROMASTER	HBB
No.	Models	1	2	3	4	5	6	7	8	9	10	11	12	13	14	15	16	17	18	19	20	21	22	23	24	25	26	27	28	29	30	31	32
*73	NKR66LL-5HXYS2	○	—	—	○	—			—		○	—		○	—		—	○			—	○				○			—	—	△		
*74	NKR66LL-5HXAS2	○	—	—	○	—			—		○	—		○	—		—	○			—	○				○			—	—	△		
*75	NKR66LL-5HXYR	○	—	—	○	—			—		—	○		○	—		—	○			—	○				○			—	—	△		
*76	NKR66LL-5JXY2	○	—	—	—	○			—		—	○		○	—		—	○			—	○				○			—	—	△		
77	NKR55LL-5GWAC	○	—	—	○	—			—		○	—		○	—		○	—			○	—				○			—	—	○		
78	NKR66LL-5GWYS2	○	—	—	○	—					○	—		○	—		—	○			—	○				○			—	—	△		
*79	NKR55EL-3EXY	○	—	—	○	—			○		—	—		○	—		○	—			○	—				○			—	—	△		
80	NKR69EL-3EXYR	○	—	—	○	—			○		—	—		○	—		○	—			○	—				○			—	—	△		
81	NKR66LL-5HXY	○	—	—	○	—			—		—	○		○	—		—	○			—	○				○			—	—	△		
82	NKR55LL-5HXYCHJ	○	—	—	○	—			—		○	—		○	—		○	—			○	—				○			—	—	△		
*83	NKR69EL-1EXYCH	○	—	○	—	—			—		○	—		○	—		○	—			○	—				○			—	—	△		
84	NKR66LL-5GWY2	○	—	—	○	—					○	—		○	—		—	○			—	○				○			—	—	△		

FRONT BRAKES (NPR·NQR 1999)

—	Not available
○	Standard
△	Factory option
	Non

		FRONT BRAKE																				
		DISC BRAKE									DRUM BRAKE											
		WHEEL CYL.			DISC						Type		WHEEL CYL.			DRUM.			LINING			
		Inside dia. (in)			Thickness (mm)			Outside dia. (mm)			2 L	D 2 L	Inside dia. (in)			Inside dia. (mm)			Width (mm)			
		2 + 1 / 8	2 + 2	2 + 1 / 4	35	40	42	265	293	310			1 + 1 / 8	1 + 3 / 16	1 + 3 / 8	279.4	300	320	60	75	100	120
No.	Models	1	2	3	4	5	6	7	8	9	10	11	12	13	14	15	16	17	18	19	20	21
*1	NPR66GU-5JXY2	—		—		—	—		—	—	○	—	○	—	—			○		○	—	—
2	NPR66GU-5EXYH	—		—		—	—		—	—	○	—	○	—	—			○		○	—	—
3	NPR66GU-5JXYSN	—		—		—	—		—	—	○	—	○	—	—			○		○	—	—
4	NPR66GDU-5LX	—		—		—	—		—	—	—	○	—	○	—			○		—	○	—
5	NPR66GU-5LXY	—		—		—	—		—	—	○	—	—	○	—			○		—	○	—
6	NPR70GU-5JXYKJ2	—		—		—	—		—	—	○	—	○	—	—			○		○	—	—
7	NPR70GU-5LXYKJ2	—		—		—	—		—	—	○	—	—	○	—			○		—	○	—
*8	NPR70GU-5LXYKTJ	—		—		—	—		—	—	○	—	—	○	—			○		—	○	—
9	NPR70GU-5LXYSNTJ	—		—		—	—		—	—	○	—	—	○	—			○		—	○	—
*10	NQR70GU-5NXYKTJ	—		—		—	—		—	—	○	—	—	—	○			○		—	—	○
*11	NPR69LU-5DXYIR	○		—		○	—		○	—	—	—	—	—	—			—		—	—	—
*12	NPR55LU-5DXYIRJ	○		—		○	—		○	—	—	—	—	—	—			—		—	—	—
*13	NPR69LU-5HXYIR	○		—		○	—		○	—	—	—	—	—	—			—		—	—	—
14	NPR55LU-5HXYIRJ	○		—		○	—		○	—	—	—	—	—	—			—		—	—	—
*15	NPR66LU-5EVXYH	—		—		—	—		—	—	○	—	○	—	—			○		○	—	—
16	NPR66LU-5JXA2	—		—		—	—		—	—	○	—	○	—	—			○		○	—	—
*17	NPR66LU-5JXY2	—		—		—	—		—	—	○	—	○	—	—			○		○	—	—
18	NPR66LU-5JXASN	—		—		—	—		—	—	○	—	○	—	—			○		○	—	—
*19	NPR66LU-5JXYSN	—		—		—	—		—	—	○	—	○	—	—			○		○	—	—
*20	NPR66LU-5JXYV	—		—		—	—		—	—	○	—	○	—	—			○		○	—	—
21	NPR66LBU-5JVXY	—		—		—	—		—	—	○	—	—	○	—			○		—	○	—
22	NPR66LU-5JVXYZ	—		—		—	—		—	—	○	—	○	—	—			○		○	—	—
23	NPR66LU-5LXA	—		—		—	—		—	—	○	—	—	○	—			○		—	○	—
24	NPR66LU-5LXY	—		—		—	—		—	—	○	—	—	○	—			○		—	○	—

REAR BRAKES (NPR-NQR 1999)

—	Not available
○	Standard
△	Factory option
	Non

		REAR BRAKE															PARKING BRAKE								BRAKE CONTROL								
		DRUM BRAKE																															
		Type		WHEEL CYL.					DRUM.				LINING				DRUM				LINING				MASTER CYL.								
				Inside dia. (in)					Inside dia. (mm)				Width (mm)				Inside dia. (mm)				Width (mm)				Inside dia. (in)								
		D2L (W/O AUTO)	D2L (W AUTO)	7/8	1	1+3/16	1+5/16	1+3/8	228.6	279.4	300	320	60	75	100	120	178	190	203	254	35	45	50	60	1+1/16	1+1/8	1+1/4	1+3/8	DSPV	LSPV	EXHAUST BRAKE	HYDROMASTER	HBB
No.	Models	1	2	3	4	5	6	7	8	9	10	11	12	13	14	15	16	17	18	19	20	21	22	23	24	25	26	27	28	29	30	31	32
*1	NPR66GU-5JXY2	○	—		○	—	—	—				○		○	—	—	—	○	—	—	—	○	—	—		○	—	—		—	○	—	—
2	NPR66GU-5EXYH	○	—		○	—	—	—				○		○	—	—	—	○	—	—	—	○	—	—		○	—	—		○	○	—	—
3	NPR66GU-5JXYSN	○	—		○	—	—	—				○		○	—	—	—	○	—	—	—	○	—	—		○	—	—		—	○	—	—
4	NPR66GDU-5LX	○	—		—	○	—	—				○		—	○	—	—	○	—	—	—	○	—	—		—	○	—		—	○	—	—
5	NPR66GU-5LXY	○	—		—	○	—	—				○		—	○	—	—	○	—	—	—	○	—	—		—	○	—		—	○	—	—
6	NPR70GU-5JXYKJ2	○	—		○	—	—	—				○		○	—	—	—	○	—	—	—	○	—	—		○	—	—		—	○	—	—
7	NPR70GU-5LXYKJ2	○	—		—	○	—	—				○		—	○	—	—	○	—	—	—	○	—	—		—	○	—		—	○	—	—
*8	NPR70GU-5LXYKTJ	○	—		—	○	—	—				○		—	○	—	—	—	○	—	—	—	○	—		—	○	—		—	○	—	—
9	NPR70GU-5LXYSNTJ	○	—		—	○	—	—				○		—	○	—	—	—	○	—	—	—	○	—		—	○	—		—	○	—	—
*10	NQR70GU-5NXYKTJ	○	—		—	—	—	○				○		—	—	○	—	—	○	—	—	—	○	—		—	—	○		—	○	—	○
*11	NPR69LU-5DXYIR	—	○		○	—	—	—				○		○	—	—	○	—	—	—	○	—	—	—		○	—	—		○	○	—	—
*12	NPR55LU-5DXYIRJ	—	○		○	—	—	—				○		○	—	—	○	—	—	—	○	—	—	—		○	—	—		○	○	—	—
*13	NPR69LU-5HXYIR	—	○		○	—	—	—				○		○	—	—	○	—	—	—	○	—	—	—		○	—	—		○	○	—	—
14	NPR55LU-5HXYIRJ	—	○		○	—	—	—				○		○	—	—	○	—	—	—	○	—	—	—		○	—	—		○	○	—	—
*15	NPR66LU-5EVXYH	○	—		○	—	—	—				○		○	—	—	—	○	—	—	—	○	—	—		○	—	—		○	○	—	—
16	NPR66LU-5JXA2	○	—		○	—	—	—				○		○	—	—	—	○	—	—	—	○	—	—		○	—	—		—	○	—	—
*17	NPR66LU-5JXY2	○	—		○	—	—	—				○		○	—	—	—	○	—	—	—	○	—	—		○	—	—		—	○	—	—
18	NPR66LU-5JXASN	○	—		○	—	—	—				○		○	—	—	—	○	—	—	—	○	—	—		○	—	—		—	○	—	—
*19	NPR66LU-5JXYSN	○	—		○	—	—	—				○		○	—	—	—	○	—	—	—	○	—	—		○	—	—		—	○	—	—
*20	NPR66LU-5JXYV	○	—		○	—	—	—				○		○	—	—	—	○	—	—	—	○	—	—		○	—	—		—	○	—	—
21	NPR66LBU-5JVXY	○	—		—	○	—	—				○		—	○	—	—	○	—	—	—	○	—	—		—	○	—		—	○	—	—
22	NPR66LU-5JVXYZ	○	—		○	—	—	—				○		○	—	—	—	○	—	—	—	○	—	—		○	—	—		○	○	—	—
23	NPR66LU-5LXA	○	—		—	○	—	—				○		—	○	—	—	○	—	—	—	○	—	—		—	○	—		—	○	—	—
24	NPR66LU-5LXY	○	—		—	○	—	—				○		—	○	—	—	○	—	—	—	○	—	—		—	○	—		—	○	—	—

FRONT BRAKES (NPR·NQR 1999)

—	Not available
○	Standard
△	Factory option
	Non

		FRONT BRAKE																				
		DISC BRAKE									DRUM BRAKE											
		WHEEL CYL.			DISC						Type		WHEEL CYL.			DRUM.			LINING			
		Inside dia. (in)			Thickness (mm)			Outside dia. (mm)			2 L	D 2 L	Inside dia. (in)			Inside dia. (mm)			Width (mm)			
		2 + 1 / 8	2 + 2	2 + 1 / 4	35	40	42	265	293	310			1 + 1 / 8	1 + 3 / 16	1 + 3 / 8	279.4	300	320	60	75	100	120
No.	Models	1	2	3	4	5	6	7	8	9	10	11	12	13	14	15	16	17	18	19	20	21
25	NPR66LU-5LVXYZ	—		—		—	—		—	—	○		—	○	—			○		—	○	—
26	NPR66LU-5LXYP	—		—		—	—		—	—	○		—	○	—			○		—	○	—
27	NQR66LU-5NVXYP	—		—		—	—		—	—	○	—	—	—	○			○		—	—	○
*28	NPR71LU-5JVXYH	—		—		—	—		—	—	○	—	○	—	—			○		○	—	—
29	NPR71LU-5JVXYHT	○		—		○	—		○	—	—	—	—	—	—			—		—	—	—
30	NPR71LU-5LVXYH	—		—		—	—		—	—	○	—	—	○	—			○		—	○	—
31	NQR71LU-5NVXY	—		—		—	—		—	—	○	—	—	—	○			○		—	—	○
32	NPR70LU-5JXYIRJ2	○		—		○	—		○	—	—	—	—	—	—			—		—	—	—
33	NPR70LU-5JXYUKJ2	○		—		○	—		○	—	—	—	—	—	—			—		—	—	—
34	NPR70LU-5JXYKJ2	—		—		—	—		—	—	○	—	○	—	—			○		○	—	—
*35	NPR70LU-5LXYKJ2	—		—		—	—		—	—	○	—	—	○	—			○		—	○	—
*36	NPR70LU-5LXYKTJ	—		—		—	—		—	—	○	—	—	○	—			○		—	○	—
37	NPR70LU-5LXYSNTJ	—		—		—	—		—	—	○	—	—	○	—			○		—	○	—
*38	NQR70LU-5LXYIRJ	—		○		—	○		—	○	—		—	—	—			—		—	—	—
39	NQR70LU-5LXYUKJ	—		○		—	○		—	○	—		—	—	—			—		—	—	—
*40	NQR70LU-5NXYKTJ	—		—		—	—		—	—	○	—	—	—	○			○		—	—	○
*41	NPR66LU-5HWYSN	—		—		—	—		—	—	○	—	○	—	—			○		○	—	—
*42	NPR71LU-5HWYH	—		—		—	—		—	—	○	—	○	—	—			○		○	—	—
43	NPR70LU-5HWYKJ2	—		—		—	—		—	—	○	—	○	—	—			○		○	—	—
44	NPR66PU-5JXA2	—		—		—	—		—	—	○	—	○	—	—			○		○	—	—
*45	NPR66PU-5JXY2	—		—		—	—		—	—	○	—	○	—	—			○		○	—	—
46	NPR66PU-5JXYSN	—		—		—	—		—	—	○	—	○	—	—			○		○	—	—
47	NPR66PBU-5JVXY	—		—		—	—		—	—	○	—	—	○	—			○		—	○	—
*48	NPR66PU-5LXA	—		—		—	—		—	—	○		—	○	—			○		—	○	—

REAR BRAKES (NPR·NQR 1999)

—	Not available
○	Standard
△	Factory option
	Non

		REAR BRAKE															PARKING BRAKE								BRAKE CONTROL								
		DRUM BRAKE																															
		Type		WHEEL CYL.					DRUM.				LINING				DRUM				LINING				MASTER CYL.								
				Inside dia. (in)					Inside dia. (mm)				Width (mm)				Inside dia. (mm)				Width (mm)				Inside dia. (in)								
		D2L (W/O AUTO)	D2L (W AUTO)	7/8	1	1+3/16	1+5/16	1+3/8	228.6	279.4	300	320	60	75	100	120	178	190	203	254	35	45	50	60	1+1/16	1+1/8	1+1/4	1+3/8	DSPV	LSPV	EXHAUST BRAKE	HYDROMASTER	HBB
No.	Models	1	2	3	4	5	6	7	8	9	10	11	12	13	14	15	16	17	18	19	20	21	22	23	24	25	26	27	28	29	30	31	32
25	NPR66LU-5LVXYZ	○	—		—	—	○	—				○		—	○	—	—	○	—	—	—	○	—	—		—	○	—		○	○	—	—
26	NPR66LU-5LXYP	○	—		—	—	○	—				○		—	○	—	—	○	—	—	—	○	—	—		—	○	—		—	○	—	—
27	NQR66LU-5NVXYP	○	—		—	—	—	○				○		—	—	○	—	○	—	—	—	○	—	—		—	—	○		—	○	○	—
*28	NPR71LU-5JVXYH	○	—		○	—	—	—				○		○	—	—	—	○	—	—	—	○	—	—		○	—	—		○	○	—	—
29	NPR71LU-5JVXYHT	—	○		—	○	—	—				○		—	○	—	—	○	—	—	—	○	—	—		—	○	—		○	○	—	—
30	NPR71LU-5LVXYH	○	—		—	—	○	—				○		—	○	—	—	○	—	—	—	○	—	—		—	○	—		○	○	—	—
31	NQR71LU-5NVXY	○	—		—	—	○	△				○		—	—	○	—	○	—	—	—	○	—	—		—	○	△		—	○	△	—
32	NPR70LU-5JXYIRJ2	—	○		—	○	—	—				○		—	○	—	—	○	—	—	—	○	—	—		—	○	—		○	○	—	—
33	NPR70LU-5JXYUKJ2	—	○		—	○	—	—				○		—	○	—	—	○	—	—	—	○	—	—		—	○	—		○	○	—	—
34	NPR70LU-5JXYKJ2	○	—		○	—	—	—				○		○	—	—	—	○	—	—	—	○	—	—		○	—	—		—	○	—	—
*35	NPR70LU-5LXYKJ2	○	—		—	○	—	—				○		—	○	—	—	○	—	—	—	○	—	—		—	○	—		—	○	—	—
*36	NPR70LU-5LXYKTJ	○	—		—	○	—	—				○		—	○	—	—	—	○	—	—	—	○	—		—	○	—		—	○	—	—
37	NPR70LU-5LXYSNTJ	○	—		—	○	—	—				○		—	○	—	—	—	○	—	—	—	○	—		—	○	—		—	○	—	—
*38	NQR70LU-5LXYIRJ	—	○		—	—	○	—				○		—	—	○	—	—	—	○	—	—	—	○		—	—	○		○	○	—	○
39	NQR70LU-5LXYUKJ	—	○		—	—	○	—				○		—	—	○	—	—	—	○	—	—	—	○		—	—	○		○	○	—	○
*40	NQR70LU-5NXYKTJ	○	—		—	—	—	○				○		—	—	○	—	—	○	—	—	—	○	—		—	—	○		—	○	—	○
*41	NPR66LU-5HWYSN	○	—		○	—	—	—				○		○	—	—	—	○	—	—	—	○	—	—		○	—	—		—	○	—	—
*42	NPR71LU-5HWYH	○	—		○	—	—	—				○		○	—	—	—	○	—	—	—	○	—	—		○	—	—		○	○	—	—
43	NPR70LU-5HWYKJ2	○	—		○	—	—	—				○		○	—	—	—	○	—	—	—	○	—	—		○	—	—		—	○	—	—
44	NPR66PU-5JXA2	○	—		○	—	—	—				○		○	—	—	—	○	—	—	—	○	—	—		○	—	—		—	○	—	—
*45	NPR66PU-5JXY2	○	—		○	—	—	—				○		○	—	—	—	○	—	—	—	○	—	—		○	—	—		—	○	—	—
46	NPR66PU-5JXYSN	○	—		○	—	—	—				○		○	—	—	—	○	—	—	—	○	—	—		○	—	—		—	○	—	—
47	NPR66PBU-5JVXY	○	—		—	○	—	—				○		—	○	—	—	○	—	—	—	○	—	—		—	○	—		—	○	—	—
*48	NPR66PU-5LXA	○	—		—	○	—	—				○		—	○	—	—	○	—	—	—	○	—	—		—	○	—		—	○	—	—

FRONT BRAKES (NPR-NQR 1999)

—	Not available
○	Standard
△	Factory option
	Non

		FRONT BRAKE																				
		DISC BRAKE									DRUM BRAKE											
		WHEEL CYL.			DISC						Type		WHEEL CYL.			DRUM.			LINING			
		Inside dia. (in)			Thickness (mm)			Outside dia. (mm)			2L	D2L	Inside dia. (in)			Inside dia. (mm)			Width (mm)			
		2+1/8	2+2	2+1/4	35	40	42	265	293	310			1+1/8	1+3/16	1+3/8	279.4	300	320	60	75	100	120
No.	Models	1	2	3	4	5	6	7	8	9	10	11	12	13	14	15	16	17	18	19	20	21
*49	NPR66PU-5LXY	—		—		—	—		—	—	○	—	—	○	—			○		—	○	—
*50	NPR66PU-5LVXYZ	—		—		—	—		—	—	○		—	○	—			○		—	○	—
*51	NPR66PU-5LXYP	—		—		—	—		—	—	○		—	○	—			○		—	○	—
52	NPR71PU-5LVXYH	—		—		—	—		—	—	○	—	—	○	—			○		—	○	—
53	NPR71PU-5LXYVJ	—		—		—	—		—	—	○	—	—	○	—			○		—	○	—
54	NQR71PU-5NVXY	—		—		—	—		—	—	○	—	—	○	△			○		—	—	○
55	NPR70PU-5JXYUKJ2	○		—		○	—		○	—	—	—	—	—	—			—		—	—	—
56	NPR70PU-5JXYKJ2	—		—		—	—		—	—	○	—	○	—	—			○		○	—	—
57	NPR70PU-5LXYKJ2	—		—		—	—		—	—	○	—	—	○	—			○		—	○	—
58	NPR70PU-5LXYKTJ	—		—		—	—		—	—	○	—	—	○	—			○		—	○	—
*59	NPR70PU-5LXYSNTJ	—		—		—	—		—	—	○	—	—	○	—			○		—	○	—
60	NQR70PU-5LXYUKJ	—		○		—	○		—	○	—	—	—	—	—			—		—	—	—
*61	NQR70PU-5NXYKJ	—		—		—	—		—	—	○	—	—	—	○			○		—	—	○
62	NQR70PU-5NXYKTJ	—		—		—	—		—	—	○	—	—	—	○			○		—	—	○
*63	NQR66RU-5NVXYP	—		—		—	—		—	—	○	—	—	—	○			○		—	—	○
64	NQR71RU-5NVXY	—		—		—	—		—	—	○	—	—	○	△			○		—	—	○
*65	NQR70RU-5LXYUKJ	—		○		—	○		—	○	—	—	—	—	—			—		—	—	—
*66	NQR70RU-5NXYHJ	—		—		—	—		—	—	○	—	—	—	○			○		—	—	○
*67	NQR70RU-5NXYZJ	—		—		—	—		—	—	○	—	—	—	○			○		—	—	○
*68	NQR70RU-5NXYVJ	—		—		—	—		—	—	○	—	—	—	○			○		—	—	○
69	NQR70RU-5NXYKJ	—		—		—	—		—	—	○	—	—	—	○			○		—	—	○
*70	NQR70TU-5LXYUKJ	—		○		—	○		—	○	—	—	—	—	—			—		—	—	—
71	NQR70TU-5NXYKJ	—		—		—	—		—	—	○	—	—	—	○			○		—	—	○
72	NPS71LU-5JXYH	—		—		—	—		—	—	—	○	—	○	—			○		○	—	—

REAR BRAKES (NPR-NQR 1999)

—	Not available
○	Standard
△	Factory option
	Non

		REAR BRAKE																																	PARKING BRAKE								BRAKE CONTROL							
		DRUM BRAKE																																																	
		Type		WHEEL CYL.					DRUM.				LINING				DRUM				LINING				MASTER CYL.																									
		D2L (W/O AUTO)	D2L (W AUTO)	Inside dia. (in)					Inside dia. (mm)				Width (mm)				Inside dia. (mm)				Width (mm)				Inside dia. (in)				DSPV	LSPV	EXHAUST BRAKE	HYDROMASTER	HBB																		
				7/8	1	1+3/16	1+5/16	1+3/8	228.6	279.4	300	320	60	75	100	120	178	190	203	254	35	45	50	60	1+1/16	1+1/8	1+1/4	1+3/8																						
No.	Models	1	2	3	4	5	6	7	8	9	10	11	12	13	14	15	16	17	18	19	20	21	22	23	24	25	26	27	28	29	30	31	32																		
*49	NPR66PU-5LXY	○	—		—	○	—	—				○		—	○	—	—	○	—	—	—	○	—	—		—	○	—		—	○	—	—																		
*50	NPR66PU-5LVXYZ	○	—		—	—	○	—				○		—	○	—	—	○	—	—	—	○	—	—		—	○	—		○	○	—	—																		
*51	NPR66PU-5LXYP	○	—		—	—	○					○		—	○	—	—	○	—	—	—	○	—	—		—	○	—		—	○	—	—																		
52	NPR71PU-5LVXYH	○	—		—	—	○	—				○		—	○	—	—	○	—	—	—	○	—	—		—	○	—		○	○	—	—																		
53	NPR71PU-5LXYVJ	○	—		—	○	—	—				○		—	○	—	—	○	—	—	—	○	—	—		—	○	—		—	○	—	—																		
54	NQR71PU-5NVXY	○	—		—	—	○	△				○		—	—	○	—	○	—	—	—	○	—	—		—	○	△		—	○	△	—																		
55	NPR70PU-5JXYUKJ2	—	○		—	○	—	—				○		—	○	—	—	○	—	—	—	○	—	—		—	○	—		○	○	—	—																		
56	NPR70PU-5JXYKJ2	○	—		○	—	—	—				○		○	—	—	—	○	—	—	—	○	—	—		○	—	—		—	○	—	—																		
57	NPR70PU-5LXYKJ2	○	—		—	○	—	—				○		—	○	—	—	○	—	—	—	○	—	—		—	○	—		—	○	—	—																		
58	NPR70PU-5LXYKTJ	○	—		—	○	—	—				○		—	○	—	—	—	○	—	—	—	○	—		—	○	—		—	○	—	—																		
*59	NPR70PU-5LXYSNTJ	○	—		—	○	—	—				○		—	○	—	—	—	○	—	—	—	○	—		—	○	—		—	○	—	—																		
60	NQR70PU-5LXYUKJ	—	○		—	—	○	—				○		—	—	○	—	—	—	○	—	—	—	○		—	—	○		○	○	—	○																		
*61	NQR70PU-5NXYKJ	○	—		—	—	—	○				○		—	—	○	—	—	○	—	—	—	○	—		—	—	○		—	○	—	○																		
62	NQR70PU-5NXYKTJ	○	—		—	—	—	○				○		—	—	○	—	—	○	—	—	—	○	—		—	—	○		—	○	—	○																		
*63	NQR66RU-5NVXYP	○	—		—	—	—	○				○		—	—	○	—	○	—	—	—	○	—	—		—	—	○		—	○	○	—																		
64	NQR71RU-5NVXY	○	—		—	—	○	△				○		—	—	○	—	○	—	—	—	○	—	—		—	○	△		—	○	△	—																		
*65	NQR70RU-5LXYUKJ	—	○		—	—	○	—				○		—	—	○	—	—	—	○	—	—	—	○		—	—	○		○	○	—	○																		
*66	NQR70RU-5NXYHJ	○	—		—	—	—	○				○		—	—	○	—	—	○	—	—	—	○	—		—	—	○		○	○	—	○																		
*67	NQR70RU-5NXYZJ	○	—		—	—	—	○				○		—	—	○	—	—	—	○	—	—	—	○		—	—	○		○	○	—	○																		
*68	NQR70RU-5NXYVJ	○	—		—	—	—	○				○		—	—	○	—	—	○	—	—	—	○	—		—	—	○		—	○	—	○																		
69	NQR70RU-5NXYKJ	○	—		—	—	—	○				○		—	—	○	—	—	○	—	—	—	○	—		—	—	○		—	○	—	○																		
*70	NQR70TU-5LXYUKJ	—	○		—	—	○	—				○		—	—	○	—	—	—	○	—	—	—	○		—	—	○		○	○	—	○																		
71	NQR70TU-5NXYKJ	○	—		—	—	—	○				○		—	—	○	—	—	○	—	—	—	○	—		—	—	○		—	○	—	○																		
72	NPS71LU-5JXYH	○	—		—	—	○	—				○		—	○	—	—	○	—	—	—	○	—	—		—	○	—		○	○	—	—																		

FRONT BRAKES (NPR-NQR 1999)

—	Not available
○	Standard
△	Factory option
	Non

		FRONT BRAKE																				
		DISC BRAKE									DRUM BRAKE											
		WHEEL CYL.			DISC						Type		WHEEL CYL.			DRUM.			LINING			
		Inside dia. (in)			Thickness (mm)			Outside dia. (mm)			2 L	D 2 L	Inside dia. (in)			Inside dia. (mm)			Width (mm)			
		2+1/8	2+2	2+1/4	35	40	42	265	293	310			1+1/8	1+3/16	1+3/8	279.4	300	320	60	75	100	120
No.	Models	1	2	3	4	5	6	7	8	9	10	11	12	13	14	15	16	17	18	19	20	21
73	NPR69GL-5DXYE	○		—		○	—		○	—	—	—	—	—	—			—		—	—	—
*74	NPR55GL-5DXYEJ	○		—		○	—		○	—	—	—	—	—	—			—		—	—	—
75	NPR66GL-5JXY2	—		—		—	—		—	—	○	—	○	—	—			○		○	—	—
76	NPR66GDL-5LX	—		—		—	—		—	—	—	○	—	○	—			○		—	○	—
77	NPR66GL-5LXY	—		—		—	—		—	—	○	—	—	○	—			○		—	○	—
*78	NPT66GL-5LXYS	—		—		—	—		—	—	○	—	—	○	—			○		—	○	—
79	NPR70GL-5JXYEJ2	○		—		○	—		○	—	—	—	—	—	—			—		—	—	—
*80	NPR66GL-5LXYR	—		—		—	—		—	—	○	—	—	○	—			○		—	○	—
81	NPR70GL-5LXYRJ2	—		—		—	—		—	—	○	—	—	○	—			○		—	○	—
82	NPR69LL-5DXYE	○		—		○	—		○	—	—	—	—	—	—			—		—	—	—
*83	NPR55LL-5DXYEJ	○		—		○	—		○	—	—	—	—	—	—			—		—	—	—
*84	NPR69LL-5HXYE	○		—		○	—		○	—	—	—	—	—	—			—		—	—	—
85	NPR55LL-5HXYEJ	○		—		○	—		○	—	—	—	—	—	—			—		—	—	—
86	NPR55LL-5HXYISJ	○		—		○	—		○	—	—	—	—	—	—			—		—	—	—
87	NPR66LL-5JXA2	—		—		—	—		—	—	○	—	○	—	—			○		○	—	—
88	NPR66LL-5JXY2	—		—		—	—		—	—	○	—	○	—	—			○		○	—	—
89	NPR66LL-5JXAC2	—		—		—	—		—	—	○	—	○	—	—			○		○	—	—
*90	NPR66LL-5JXYC2	—		—		—	—		—	—	○	—	○	—	—			○		○	—	—
91	NPR66LL-5JXAS2	—		—		—	—		—	—	○	—	○	—	—			○		○	—	—
*92	NPR66LL-5JXYS2	—		—		—	—		—	—	○	—	○	—	—			○		○	—	—
93	NPR66LL-5JXYR	—		—		—	—		—	—	○	—	○	—	—			○		○	—	—
*94	NPR70LL-5JXYRJ2	—		—		—	—		—	—	○	—	○	—	—			○		○	—	—
95	NPR66LBL-5JVXY	—		—		—	—		—	—	○	—	—	○	—			○		—	○	—
*96	NPR66LL-5LXA	—		—		—	—		—	—	○	—	—	○	—			○		—	○	—

REAR BRAKES (NPR-NQR 1999)

—	Not available
○	Standard
△	Factory option
	Non

		REAR BRAKE															PARKING BRAKE								BRAKE CONTROL								
		DRUM BRAKE																															
		Type		WHEEL CYL.					DRUM.				LINING				DRUM				LINING				MASTER CYL.								
				Inside dia. (in)					Inside dia. (mm)				Width (mm)				Inside dia. (mm)				Width (mm)				Inside dia. (in)								
		D2L (W/O AUTO)	D2L (W AUTO)	7/8	1	1+3/16	1+5/16	1+3/8	228.6	279.4	300	320	60	75	100	120	178	190	203	254	35	45	50	60	1+1/16	1+1/8	1+1/4	1+3/8	DSPV	LSPV	EXHAUST BRAKE	HYDROMASTER	HBB
No.	Models	1	2	3	4	5	6	7	8	9	10	11	12	13	14	15	16	17	18	19	20	21	22	23	24	25	26	27	28	29	30	31	32
73	NPR69GL-5DXYE	—	○		○	—	—	—				○		○	—	—	○	—	—	—	○	—	—	—		○	—	—		○	○	—	—
*74	NPR55GL-5DXYEJ	—	○		○	—	—	—				○		○	—	—	○	—	—	—	○	—	—	—		○	—	—		○	○	—	—
75	NPR66GL-5JXY2	○	—		○	—	—	—				○		○	—	—	—	○	—	—	—	○	—	—		○	—	—		—	○	—	—
76	NPR66GDL-5LX	○	—		—	○	—	—				○		—	○	—	—	○	—	—	—	○	—	—		—	○	—		—	○	—	—
77	NPR66GL-5LXY	○	—		—	○	—	—				○		—	○	—	—	○	—	—	—	○	—	—		—	○	—		—	○	—	—
*78	NPT66GL-5LXYS	○	—		—	○	—	—				○		—	○	—	—	○	—	—	—	○	—	—		—	○	—		—	○	—	—
79	NPR70GL-5JXYEJ2	—	○		—	○	—	—				○		—	○	—	—	○	—	—	—	○	—	—		—	○	—		○	○	—	—
*80	NPR66GL-5LXYR	○	—		—	○	—	—				○		—	○	—	—	○	—	—	—	○	—	—		—	○	—		—	○	—	—
81	NPR70GL-5LXYRJ2	○	—		—	○	—	—				○		—	○	—	—	○	—	—	—	○	—	—		—	○	—		—	○	—	—
82	NPR69LL-5DXYE	—	○		○	—	—	—				○		○	—	—	○	—	—	—	○	—	—	—		○	—	—		○	○	—	—
*83	NPR55LL-5DXYEJ	—	○		○	—	—	—				○		○	—	—	○	—	—	—	○	—	—	—		○	—	—		○	○	—	—
*84	NPR69LL-5HXYE	—	○		○	—	—	—				○		○	—	—	○	—	—	—	○	—	—	—		○	—	—		○	○	—	—
85	NPR55LL-5HXYEJ	—	○		○	—	—	—				○		○	—	—	○	—	—	—	○	—	—	—		○	—	—		○	○	—	—
86	NPR55LL-5HXYISJ	—	○		○	—	—	—				○		○	—	—	○	—	—	—	○	—	—	—		○	—	—		○	○	—	—
87	NPR66LL-5JXA2	○	—		○	—	—	—				○		○	—	—	—	○	—	—	—	○	—	—		○	—	—		—	○	—	—
88	NPR66LL-5JXY2	○	—		○	—	—	—				○		○	—	—	—	○	—	—	—	○	—	—		○	—	—		—	○	—	—
89	NPR66LL-5JXAC2	○	—		○	—	—	—				○		○	—	—	—	○	—	—	—	○	—	—		○	—	—		—	○	—	—
*90	NPR66LL-5JXYC2	○	—		○	—	—	—				○		○	—	—	—	○	—	—	—	○	—	—		○	—	—		—	○	—	—
91	NPR66LL-5JXAS2	○	—		○	—	—	—				○		○	—	—	—	○	—	—	—	○	—	—		○	—	—		—	○	—	—
*92	NPR66LL-5JXYS2	○	—		○	—	—	—				○		○	—	—	—	○	—	—	—	○	—	—		○	—	—		—	○	—	—
93	NPR66LL-5JXYR	○	—		○	—	—	—				○		○	—	—	—	○	—	—	—	○	—	—		○	—	—		—	○	—	—
*94	NPR70LL-5JXYRJ2	○	—		○	—	—	—				○		○	—	—	—	○	—	—	—	○	—	—		○	—	—		—	○	—	—
95	NPR66LBL-5JVXY	○	—		—	○	—	—				○		—	○	—	—	○	—	—	—	○	—	—		○	—	—		—	○	—	—
*96	NPR66LL-5LXA	○	—		—	○	—	—				○		—	○	—	—	○	—	—	—	○	—	—		—	○	—		—	○	—	—

FRONT BRAKES (NPR·NQR 1999)

—	Not available
○	Standard
△	Factory option
	Non

		FRONT BRAKE																				
		DISC BRAKE									DRUM BRAKE											
		WHEEL CYL.			DISC						Type		WHEEL CYL.			DRUM.			LINING			
		Inside dia. (in)			Thickness (mm)			Outside dia. (mm)			2 L	D 2 L	Inside dia. (in)			Inside dia. (mm)			Width (mm)			
		2 + 1 / 8	2 + 2	2 + 1 / 4	3 5	4 0	4 2	2 6 5	2 9 3	3 1 0			1 + 1 / 8	1 + 3 / 16	1 + 3 / 8	2 7 9 . 4	3 0 0	3 2 0	6 0	7 5	1 0 0	1 2 0
No.	Models	1	2	3	4	5	6	7	8	9	10	11	12	13	14	15	16	17	18	19	20	21
* 97	NPR66LL-5LXY	—		—		—	—		—	—	○	—	—	○	—			○		—	○	—
* 98	NPR66LL-5LY	—		—		—	—		—	—	○	—	—	○	—			○		—	○	—
* 99	NPR66LL-5LXAC	—		—		—	—		—	—	○	—	—	○	—			○		—	○	—
*100	NPR66LL-5LXYC	—		—		—	—		—	—	○	—	—	○	—			○		—	○	—
*101	NPR66LL-5LXAS	—		—		—	—		—	—	○	—	—	○	—			○		—	○	—
*102	NPR66LL-5LXYS	—		—		—	—		—	—	○	—	—	○	—			○		—	○	—
*103	NPR66LL-5LXYR	—		—		—	—		—	—	○	—	—	○	—			○		—	○	—
104	NPR66LL-5LXYG	—		—		—	—		—	—	○	—	—	○	—			○		—	○	—
105	NPR71LL-5LVXYBRJ	—		—		—	—		—	—	○	—	—	○	—			○		—	○	—
*106	NQR71LL-5NVXY	—		—		—	—		—	—	○	—	—	○	△			○		—	—	○
107	NPR70LL-5JXYISJ2	○		—		○	—		○	—	—	—	—	—	—			—		—	—	—
108	NPR70LL-5JXYISTJ	○		—		○	—		○	—	—	—	—	—	—			—		—	—	—
109	NPR70LL-5JXYEJ2	○		—		○	—		○	—	—	—	—	—	—			—		—	—	—
110	NPR71LL-5LVXYJ	—		—		—	—		—	—	○	—	—	○	—			○		—	○	—
111	NPR70LL-5LXYRJ2	—		—		—	—		—	—	○	—	—	○	—			○		—	○	—
112	NPR71LL-5LVXYCLJ	—		—		—	—		—	—	○	—	—	○	—			○		—	○	—
113	NQR70LL-5LXYEJ	—		○		—	○		—	○	—	—	—	—	—			—		—	—	—
114	NQR70LL-5LYXJ	—		—		—	—		—	—	○		—	—	○			○		—	—	○
115	NQR70LL-5LYXJT	—		—		—	—		—	—	○		—	—	○			○		—	—	○
116	NQR70LL-5NXYBRJ	—		—		—	—		—	—	○	—	—	—	○			○		—	—	○
*117	NPR70LL-5HWYISJ2	○		—		○	—		○	—	—	—	—	—	—			—		—	—	—
118	NPR70LL-5HWYISTJ	○		—		○	—		○	—	—	—	—	—	—			—		—	—	—
*119	NPR66PL-5JXA2	—		—		—	—		—	—	○	—	○	—	—			○		○	—	—
*120	NPR66PL-5JXY2	—		—		—	—		—	—	○	—	○	—	—			○		○	—	—

REAR BRAKES (NPR-NQR 1999)

—	Not available
○	Standard
△	Factory option
	Non

		REAR BRAKE															PARKING BRAKE								BRAKE CONTROL								
		DRUM BRAKE																															
		Type		WHEEL CYL.					DRUM.				LINING				DRUM				LINING				MASTER CYL.								
				Inside dia. (in)					Inside dia. (mm)				Width (mm)				Inside dia. (mm)				Width (mm)				Inside dia. (in)								
		D2L (W/O AUTO)	D2L (W AUTO)	7/8	1	1+3/16	1+5/16	1+3/8	228.6	279.4	300	320	60	75	100	120	178	190	203	254	35	45	50	60	1+1/16	1+1/8	1+1/4	1+3/8	DSPV	LSPV	EXHAUST BRAKE	HYDROMASTER	HBB
No.	Models	1	2	3	4	5	6	7	8	9	10	11	12	13	14	15	16	17	18	19	20	21	22	23	24	25	26	27	28	29	30	31	32
* 97	NPR66LL-5LXY	○	—		—	○	—	—				○		—	○	—	—	○	—	—	—	○	—	—		—	○	—		—	○	—	—
* 98	NPR66LL-5LY	○	—		—	○	—	—				○		—	○	—	—	○	—	—	—	○	—	—		—	○	—		—	○	—	—
* 99	NPR66LL-5LXAC	○	—		—	○	—	—				○		—	○	—	—	○	—	—	—	○	—	—		—	○	—		—	○	—	—
*100	NPR66LL-5LXYC	○	—		—	○	—	—				○		—	○	—	—	○	—	—	—	○	—	—		—	○	—		—	○	—	—
*101	NPR66LL-5LXAS	○	—		—	○	—	—				○		—	○	—	—	○	—	—	—	○	—	—		—	○	—		—	○	—	—
*102	NPR66LL-5LXYS	○	—		—	○	—	—				○		—	○	—	—	○	—	—	—	○	—	—		—	○	—		—	○	—	—
*103	NPR66LL-5LXYR	○	—		—	○	—	—				○		—	○	—	—	○	—	—	—	○	—	—		—	○	—		—	○	—	—
104	NPR66LL-5LXYG	○	—		—	○	—	—				○		—	○	—	—	○	—	—	—	○	—	—		—	○	—		—	○	—	—
105	NPR71LL-5LVXYBRJ	○	—		—	—	○	—				○		—	○	—	—	○	—	—	—	○	—	—		—	○	—		○	○	—	—
*106	NQR71LL-5NVXY	○	—		—	—	○	△				○		—	—	○	—	○	—	—	—	○	—	—		—	○	△		—	○	△	—
107	NPR70LL-5JXYISJ2	—	○		—	○	—	—				○		—	○	—	—	○	—	—	—	○	—	—		—	○	—		○	○	—	—
108	NPR70LL-5JXYISTJ	—	○		—	○	—	—				○		—	○	—	—	—	○	—	—	—	○	—		—	○	—		○	○	—	—
109	NPR70LL-5JXYEJ2	—	○		—	○	—	—				○		—	○	—	—	○	—	—	—	○	—	—		—	○	—		○	○	—	—
110	NPR71LL-5LVXYJ	○	—		—	○	—	—				○		—	○	—	—	○	—	—	—	○	—	—		—	○	—		—	○	—	—
111	NPR70LL-5LXYRJ2	○	—		—	○	—	—				○		—	○	—	—	○	—	—	—	○	—	—		—	○	—		—	○	—	—
112	NPR71LL-5LVXYCLJ	○	—		—	—	○	—				○		—	○	—	—	○	—	—	—	○	—	—		—	○	—		—	○	—	—
113	NQR70LL-5LXYEJ	—	○		—	—	○	—				○		—	—	○	—	—	—	○	—	—	—	○		—	—	○		○	○	—	○
114	NQR70LL-5LYXJ	○	—					○				○		—	—	○	—	—	○	—	—	—	○	—		—	—	○		—	○		○
115	NQR70LL-5LYXJT	○	—					○				○		—	—	○	—	—	○	—	—	—	○	—		—	—	○		—	○		○
116	NQR70LL-5NXYBRJ	○	—		—	—	—	○				○		—	—	○	—	—	—	○	—	—	—	○		—	—	○		○	○	—	○
*117	NPR70LL-5HWYISJ2	—	○		—	○	—	—				○		—	○	—	—	○	—	—	—	○	—	—		—	○	—		○	○	—	—
118	NPR70LL-5HWYISTJ	—	○		—	○	—	—				○		—	○	—	—	—	○	—	—	—	○	—		—	○	—		○	○	—	—
*119	NPR66PL-5JXA2	○	—		○	—	—	—				○		○	—	—	—	○	—	—	—	○	—	—		○	—	—		—	○	—	—
*120	NPR66PL-5JXY2	○	—		○	—	—	—				○		○	—	—	—	○	—	—	—	○	—	—		○	—	—		—	○	—	—

FRONT BRAKES (NPR·NQR 1999)

—	Not available
○	Standard
△	Factory option
	Non

		FRONT BRAKE																					
		DISC BRAKE									DRUM BRAKE												
		WHEEL CYL.			DISC						Type		WHEEL CYL.			DRUM.			LINING			
		Inside dia. (in)			Thickness (mm)			Outside dia. (mm)			2 L	D 2 L	Inside dia. (in)			Inside dia. (mm)			Width (mm)			
		2 + 1 / 8	2 + 2	2 + 1 / 4	35	40	42	265	293	310			1 + 1 / 8	1 + 3 / 16	1 + 3 / 8	279.4	300	320	60	75	100	120
No.	Models	1	2	3	4	5	6	7	8	9	10	11	12	13	14	15	16	17	18	19	20	21
*121	NPR66PL-5JXYR	—		—		—	—		—	—	○	—	○	—	—			○		○	—	—
*122	NPR70PL-5JXYRJ2	—		—		—	—		—	—	○	—	○	—	—			○		○	—	—
*123	NPR66PBL-5JVXY	—		—		—	—		—	—	○	—	—	○	—			○		—	○	—
*124	NPR66PL-5LXA	—		—		—	—		—	—	○	—	—	○	—			○		—	○	—
125	NPR66PL-5LXY	—		—		—	—		—	—	○	—	—	○	—			○		—	○	—
126	NPR66PL-5LXAC	—		—		—	—		—	—	○	—	—	○	—			○		—	○	—
*127	NPR66PL-5LXYC	—		—		—	—		—	—	○	—	—	○	—			○		—	○	—
*128	NPR66PL-5LXAS	—		—		—	—		—	—	○	—	—	○	—			○		—	○	—
*129	NPR66PL-5LXYS	—		—		—	—		—	—	○	—	—	○	—			○		—	○	—
*130	NPR66PL-5LXYR	—		—		—	—		—	—	○	—	—	○	—			○		—	○	—
*131	NPR71PL-5LVXYBRJ	—		—		—	—		—	—	○	—	—	○	—			○		—	○	—
*132	NQR66PL-5NVXA	—		—		—	—		—	—	○	—	—	○	△			○		—	—	○
*133	NQR71PL-5NVXY	—		—		—	—		—	—	○	—	—	○	△			○		—	—	○
134	NPR70PL-5JXYEJ2	○		—		○	—		○	—	—	—	—	—	—			—		—	—	—
135	NPR70PL-5JXYISJ2	○		—		○	—		○	—	—	—	—	—	—			—		—	—	—
*136	NPR70PL-5JXYISTJ	○		—		○	—		○	—	—	—	—	—	—			—		—	—	—
137	NPR71PL-5LVXYJ	—		—		—	—		—	—	○	—	—	○	—			○		—	○	—
138	NPR70PL-5LXYRJ2	—		—		—	—		—	—	○	—	—	○	—			○		—	○	—
139	NPR71PL-5LVXYCLJ	—		—		—	—		—	—	○	—	—	○	—			○		—	○	—
140	NPR70PL-5LXYCHJ2	—		—		—	—		—	—	○	—	—	○	—			○		—	○	—
141	NQR70PL-5LXYEJ	—		○		—	○		○	—	—	—	—	—	—			—		—	—	—
142	NQR70PL-5LYXJ	—		—		—	—		—	—	○	—	—	—	○			○		—	—	○
143	NQR70PL-5LYXJT	—		—		—	—		—	—	○	—	—	—	○			○		—	○	○
144	NQR70PL-5NXYBRJ	—		—		—	—		—	—	○	—	—	—	○			○		—	○	○

REAR BRAKES (NPR-NQR 1999)

—	Not available
○	Standard
△	Factory option
	Non

		REAR BRAKE															PARKING BRAKE								BRAKE CONTROL								
		DRUM BRAKE																															
		Type		WHEEL CYL.					DRUM.				LINING				DRUM				LINING				MASTER CYL.								
				Inside dia. (in)					Inside dia. (mm)				Width (mm)				Inside dia. (mm)				Width (mm)				Inside dia. (in)								
		D2L (W/O AUTO)	D2L (W AUTO)	7/8	1	1+3/16	1+5/16	1+3/8	228.6	279.4	300	320	60	75	100	120	178	190	203	254	35	45	50	60	1+1/16	1+1/8	1+1/4	1+3/8	DSPV	LSPV	EXHAUST BRAKE	HYDROMASTER	HBB
No.	Models	1	2	3	4	5	6	7	8	9	10	11	12	13	14	15	16	17	18	19	20	21	22	23	24	25	26	27	28	29	30	31	32
*121	NPR66PL-5JXYR	○	—		○	—	—	—				○		○	—	—	—	○	—	—	—	○	—	—		○	—	—		—	○	—	—
*122	NPR70PL-5JXYRJ2	○	—		○	—	—	—				○		○	—	—	—	○	—	—	—	○	—	—		○	—	—		—	○	—	—
*123	NPR66PBL-5JVXY	○	—		—	○	—	—				○		—	○	—	—	○	—	—	—	○	—	—		○	—	—		—	○	—	—
*124	NPR66PL-5LXA	○	—		—	○	—	—				○		—	○	—	—	○	—	—	—	○	—	—		—	○	—		—	○	—	—
125	NPR66PL-5LXY	○	—		—	○	—	—				○		—	○	—	—	○	—	—	—	○	—	—		—	○	—		—	○	—	—
126	NPR66PL-5LXAC	○	—		—	○	—	—				○		—	○	—	—	○	—	—	—	○	—	—		—	○	—		—	○	—	—
*127	NPR66PL-5LXYC	○	—		—	○	—	—				○		—	○	—	—	○	—	—	—	○	—	—		—	○	—		—	○	—	—
*128	NPR66PL-5LXAS	○	—		—	○	—	—				○		—	○	—	—	○	—	—	—	○	—	—		—	○	—		—	○	—	—
*129	NPR66PL-5LXYS	○	—		—	○	—	—				○		—	○	—	—	○	—	—	—	○	—	—		—	○	—		—	○	—	—
*130	NPR66PL-5LXYR	○	—		—	○	—	—				○		—	○	—	—	○	—	—	—	○	—	—		—	○	—		—	○	—	—
*131	NPR71PL-5LVXYBRJ	○	—		—	—	○	—				○		—	○	—	—	○	—	—	—	○	—	—		—	○	—		○	○	—	—
*132	NQR66PL-5NVXA	○	—		—	—	○	△				○		—	—	○	—	○	—	—	—	○	—	—		—	○	△		—	○	△	—
*133	NQR71PL-5NVXY	○	—		—	—	○	△				○		—	—	○	—	○	—	—	—	○	—	—		—	○	△		—	○	△	—
134	NPR70PL-5JXYEJ2	—	○		—	○	—	—				○		—	○	—	—	○	—	—	—	○	—	—		—	○	—		○	○	—	—
135	NPR70PL-5JXYISJ2	—	○		—	○	—	—				○		—	○	—	—	○	—	—	—	○	—	—		—	○	—		○	○	—	—
*136	NPR70PL-5JXYISTJ	—	○		—	○	—	—				○		—	○	—	—	—	○	—	—	—	○	—		—	○	—		○	○	—	—
137	NPR71PL-5LVXYJ	○	—		—	○	—	—				○		—	○	—	—	○	—	—	—	○	—	—		—	○	—		—	○	—	—
138	NPR70PL-5LXYRJ2	○	—		—	○	—	—				○		—	○	—	—	○	—	—	—	○	—	—		—	○	—		—	○	—	—
139	NPR71PL-5LVXYCLJ	○	—		—	—	○	—				○		—	○	—	—	○	—	—	—	○	—	—		—	○	—		—	○	—	—
140	NPR70PL-5LXYCHJ2	○	—		—	○	—	—				○		—	○	—	—	○	—	—	—	○	—	—		—	○	—		—	○	—	—
141	NQR70PL-5LXYEJ	—	○		—	—	○	—				○		—	—	○	—	—	—	○	—	—	—	○		—	—	○		○	○	—	○
142	NQR70PL-5LYXJ	○	—					○				○		—	—	○	—	—	○	—	—	—	○	—		—	—	○		—	○		○
143	NQR70PL-5LYXJT	○	—					○				○		—	—	○	—	—	○	—	—	—	○	—		—	—	○		—	○		○
144	NQR70PL-5NXYBRJ	○	—		—	—	—	○				○		—	—	○	—	—	—	○	—	—	—	○		—	—	○		○	○	—	○

FRONT BRAKES (NPR-NQR 1999)

—	Not available
○	Standard
△	Factory option
	Non

		FRONT BRAKE																				
		DISC BRAKE									DRUM BRAKE											
		WHEEL CYL.			DISC						Type		WHEEL CYL.			DRUM.			LINING			
		Inside dia. (in)			Thickness (mm)			Outside dia. (mm)			2 L	D 2 L	Inside dia. (in)			Inside dia. (mm)			Width (mm)			
		2 + 1 / 8	2 + 2	2 + 1 / 4	35	40	42	265	293	310			1 + 1 / 8	1 + 3 / 16	1 + 3 / 8	279.4	300	320	60	75	100	120
No.	Models	1	2	3	4	5	6	7	8	9	10	11	12	13	14	15	16	17	18	19	20	21
*145	NQR70PL-5NXYCLJ	—		—		—	—		—	—	○	—	—	—	○			○		—	—	○
146	NQR70PL-5NXYCHJ	—		—		—	—		—	—	○	—	—	—	○			○		—	—	○
147	NQR70PL-5NXYRJ	—		—		—	—		—	—	○	—	—	—	○			○		—	—	○
148	NQR70PL-5NXYGJ	—		—		—	—		—	—	○	—	—	—	○			○		—	—	○
149	NQR71RL-5NVXY	—		—		—	—		—	—	○	—	—	○	△			○		—	—	○
*150	NQR70RL-5LXYEJ	—		○		—	○		—	○	—	—	—	—	—			—		—	—	○
*151	NQR70RL-5LYXJ	—		—		—	—		—	—	○	—	—	—	○			○		—	—	○
*152	NQR70RL-5LYXJT	—		—		—	—		—	—	○	—	—	—	○			○		—	—	○
*153	NQR70RL-5NXYBRJ	—		—		—	—		—	—	○	—	—	—	○			○		—	—	○
*154	NQR70RL-5NXYCLJ	—		—		—	—		—	—	○	—	—	—	○			○		—	—	○
*155	NQR70RL-5NXYCHJ	—		—		—	—		—	—	○	—	—	—	○			○		—	—	○
156	NQR70RL-5NXYRJ	—		—		—	—		—	—	○	—	—	—	○			○		—	—	○
*157	NQR70TL-5LXYEJ	—		○		—	○		—	○	—	—	—	—	—			—		—	—	—
158	NQR70TL-5LXYISJ	—		○		—	○		—	○	—	—	—	—	—			—		—	—	—
*159	NQR71PL-5NVXYS	—		—		—	—		—	—	○	—	—	○	△			○		—	—	○
*160	NPR71PL-5LVXYCHJ	—		—		—	—		—	—	○	—	—	○	—			○		—	○	—
*161	NPR71GL-5JXYBRJ	—		—		—	—		—	—	○	—	○	—	—			○		○	—	—
162	NPR71LL-5JXYBRJ	—		—		—	—		—	—	○	—	○	—	—			○		○	—	—
*163	NPR71PL-5JXYBRJ	—		—		—	—		—	—	○	—	○	—	—			○		○	—	—
*164	NQR71RL-5NVXYS	—		—		—	—		—	—	○	—	—	○	△			○		—	—	○
167	NPR71GU-5JVXYKJ	—		—		—	—		—	—	○	—	○	—	—			○		○	—	—
*168	NPR71LU-5LVXYKJ	—		—		—	—		—	—	○	—	—	○	—			○		—	○	—
169	NPR71PU-5JVXYKJ	—		—		—	—		—	—	○	—	○	—	—			○		○	—	—
170	NPR71PU-5LVXYKJ	—		—		—	—		—	—	○	—	—	○	—			○		—	○	—

REAR BRAKES (NPR·NQR 1999)

—	Not available
○	Standard
△	Factory option
	Non

		REAR BRAKE															PARKING BRAKE								BRAKE CONTROL								
		DRUM BRAKE																															
		Type		WHEEL CYL.					DRUM.				LINING				DRUM				LINING				MASTER CYL.								
				Inside dia. (in)					Inside dia. (mm)				Width (mm)				Inside dia. (mm)				Width (mm)				Inside dia. (in)								
		D2L (W/O AUTO)	D2L (W AUTO)	7/8	1	1+3/16	1+5/16	1+3/8	228.6	279.4	300	320	60	75	100	120	178	190	203	254	35	45	50	60	1+1/16	1+1/8	1+1/4	1+3/8	DSPV	LSPV	EXHAUST BRAKE	HYDROMASTER	HBB
No.	Models	1	2	3	4	5	6	7	8	9	10	11	12	13	14	15	16	17	18	19	20	21	22	23	24	25	26	27	28	29	30	31	32
*145	NQR70PL-5NXYCLJ	○	—		—	—	—	○				○		—	—	○	—	—	○	—	—	—	○	—		—	—	○		—	○	—	○
146	NQR70PL-5NXYCHJ	○	—		—	—	—	○				○		—	—	○	—	—	○	—	—	—	○	—		—	—	○		—	○	—	○
147	NQR70PL-5NXYRJ	○	—		—	—	—	○				○		—	—	○	—	—	○	—	—	—	○	—		—	—	○		—	○	—	○
148	NQR70PL-5NXYGJ	○	—		—	—	—	○				○		—	—	○	—	—	○	—	—	—	○	—		—	—	○		—	○	—	○
149	NQR71RL-5NVXY	○	—		—	—	○	△				○		—	—	○	—	○	—	—	—	○	—	—		—	○	△		—	○	△	—
*150	NQR70RL-5LXYEJ	—	○		—	—	○	—				○		—	—	○	—	—	—	○	—	—	—	○		—	—	○		○	○	—	○
*151	NQR70RL-5LYXJ	○	—					○				○		—	—	○	—	—	○	—	—	—	○	—		—	—	○		—	○		○
*152	NQR70RL-5LYXJT	○	—					○				○		—	—	○	—	—	○	—	—	—	○	—		—	—	○		—	○		○
*153	NQR70RL-5NXYBRJ	○	—		—	—	—	○				○		—	—	○	—	—	—	○	—	—	—	○		—	—	○		○	○	—	○
*154	NQR70RL-5NXYCLJ	○	—					○				○		—	—	○	—	—	○	—	—	—	○	—		—	—	○		—	○	—	○
*155	NQR70RL-5NXYCHJ	○	—					○				○		—	—	○	—	—	○	—	—	—	○	—		—	—	○		—	○	—	○
156	NQR70RL-5NXYRJ	○	—		—	—	—	○				○		—	—	○	—	—	○	—	—	—	○	—		—	—	○		—	○	—	○
*157	NQR70TL-5LXYEJ	—	○		—	—	○	—				○		—	—	○	—	—	—	○	—	—	—	○		—	—	○		○	○	—	○
158	NQR70TL-5LXYISJ	—	○		—	—	○	—				○		—	—	○	—	—	—	○	—	—	—	○		—	—	○		○	○	—	○
*159	NQR71PL-5NVXYS	○	—		—	—	○	△				○		—	—	○	—	○	—	—	—	○	—	—		—	○	△		—	○	△	—
*160	NPR71PL-5LVXYCHJ	○	—		—	○	—	—				○		—	○	—	—	○	—	—	—	○	—	—		—	○	—		—	○	—	—
*161	NPR71GL-5JXYBRJ	○	—		○	—	—	—				○		○	—	—	—	○	—	—	—	○	—	—		○	—	—		○	○	—	—
162	NPR71LL-5JXYBRJ	○	—		○	—	—	—				○		○	—	—	—	○	—	—	—	○	—	—		○	—	—		○	○	—	—
*163	NPR71PL-5JXYBRJ	○	—		○	—	—	—				○		○	—	—	—	○	—	—	—	○	—	—		○	—	—		○	○	—	—
*164	NQR71RL-5NVXYS	○	—		—	—	○	△				○		—	—	○	—	○	—	—	—	○	—	—		—	○	△		—	○	△	—
167	NPR71GU-5JVXYKJ	○	—		○	—	—	—				○		○	—	—	—	○	—	—	—	○	—	—		○	—	—		—	○	—	—
*168	NPR71LU-5LVXYKJ	○	—		—	○	—	—				○		—	○	—	—	○	—	—	—	○	—	—		—	○	—		—	○	—	—
169	NPR71PU-5JVXYKJ	○	—		○	—	—	—				○		○	—	—	—	○	—	—	—	○	—	—		○	—	—		—	○	—	—
170	NPR71PU-5LVXYKJ	○	—		—	○	—	—				○		—	○	—	—	○	—	—	—	○	—	—		—	○	—		—	○	—	—

FRONT BRAKES (NPR·NQR 1999)

—	Not available
○	Standard
△	Factory option
	Non

		FRONT BRAKE																				
		DISC BRAKE									DRUM BRAKE											
		WHEEL CYL.			DISC						Type		WHEEL CYL.			DRUM.			LINING			
		Inside dia. (in)			Thickness (mm)			Outside dia. (mm)			2L	D2L	Inside dia. (in)			Inside dia. (mm)			Width (mm)			
		2+1/8	2+2	2+1/4	35	40	42	265	293	310			1+1/8	1+3/16	1+3/8	279.4	300	320	60	75	100	120
No.	Models	1	2	3	4	5	6	7	8	9	10	11	12	13	14	15	16	17	18	19	20	21
171	NPR70LU-5HWYIRJ2	○		—		○	—		○	—	—	—	—	—	—			—		—	—	—
*172	NQR66RU-5NVXY	—		—		—	—		—	—	○	—	—	○	△			○		—	—	○
173	NPR66GDL-5LXS	—		—		—	—		—	—	—	○	—	○	—			○		—	○	—
*174	NPR70GU-5JXYUKJ2	○		—		○	—		○	—	—	—	—	—	—			—		—	—	—
*175	NQR70LL-5LXYISJ	—		○		—	○		—	○	—	—	—	—	—			—		—	—	—
176	NQR70PL-5LXYISJ	—		○		—	○		—	○	—	—	—	—	—			—		—	—	—
177	NQR70RL-5LXYISJ	—		○		—	○		—	○	—	—	—	—	—			—		—	—	—

REAR BRAKES (NPR·NQR 1999)

—	Not available
○	Standard
△	Factory option
	Non

		REAR BRAKE															PARKING BRAKE								BRAKE CONTROL								
		DRUM BRAKE																															
		Type		WHEEL CYL.					DRUM.				LINING				DRUM				LINING				MASTER CYL.								
				Inside dia. (in)					Inside dia. (mm)				Width (mm)				Inside dia. (mm)				Width (mm)				Inside dia. (in)								
		D2L (W/O AUTO)	D2L (W AUTO)	7/8	1	1+3/16	1+5/16	1+3/8	228.6	279.4	300	320	60	75	100	120	178	190	203	254	35	45	50	60	1+1/16	1+1/8	1+1/4	1+3/8	DSPV	LSPV	EXHAUST BRAKE	HYDROMASTER	HBB
No.	Models	1	2	3	4	5	6	7	8	9	10	11	12	13	14	15	16	17	18	19	20	21	22	23	24	25	26	27	28	29	30	31	32
171	NPR70LU-5HWYIRJ2	—	○		—	○	—	—				○		—	○	—	—	○	—	—	—	○	—	—		—	○	—		○	○	—	—
*172	NQR66RU-5NVXY	○	—		—	—	○	△				○		—	—	○	—	○	—	—	—	○	—	—		—	○	△		—	○	△	—
173	NPR66GDL-5LXS	○	—		—	○	—	—				○		—	○	—	—	○	—	—	—	○	—	—		—	○	—		—	○	—	—
*174	NPR70GU-5JXYUKJ2	—	○		—	○	—	—				○		—	○	—	—	○	—	—	—	○	—	—		—	○	—		○	○	—	—
*175	NQR70LL-5LXYISJ	—	○		—	—	○	—				○		—	—	○	—	—	—	○	—	—	—	○		—	—	○		○	○	—	○
176	NQR70PL-5LXYISJ	—	○		—	—	○	—				○		—	—	○	—	—	—	○	—	—	—	○		—	—	○		○	○	—	○
177	NQR70RL-5LXYISJ	—	○		—	—	○	—				○		—	—	○	—	—	—	○	—	—	—	○		—	—	○		○	○	—	○

SERVICE STANDARD

ITEMS		SERVICE STANDARD	SERVICE LIMIT
FRONT DISC BRAKE ASSEMBLY			
Pad Thickness (ϕ265mm)	mm (in)	12.0 (0.472)	1.0 (0.039)
Pad Thickness (ϕ282mm)	mm (in)	14.0 (0.551)	1.0 (0.039)
Pad Thickness (ϕ293&ϕ310mm)	mm (in)	13.0 (0.510)	1.0 (0.039)
Piston and Cylinder Clearance	mm (in)	0.08 – 0.18 (0.0031 – 0.0071)	0.23 (0.0091)
Disc Lateral Run out	mm (in)	0.13 (0.005) or less	–
Disc Maximum Parallelism	mm (in)	0.02 (0.0008)	–
Disc Thickness (ϕ265mm)	mm (in)	30.0 (1.181)	28.5 (1.122)
Disc Thickness (ϕ282mm)	mm (in)	35.0 (1.378)	32.0 (1.260)
Disc Thickness (ϕ293mm)	mm (in)	40.0 (1.575)	37.0 (1.457)
Disc Thickness (ϕ310mm)	mm (in)	42.0 (1.654)	39.0 (1.535)
FRONT DRUM BRAKE ASSEMBLY			
Brake Drum Inside Diameter	mm (in)	279.4 (11.00)	281.0 (11.06)
		300.0 (11.81)	301.5 (11.87)
		320.0 (12.60)	321.5 (12.66)
Brake Drum Run-out	mm (in)	0.13 (0.005) or less	–
Brake Lining Thickness or Rivet Depth	mm (in)	–	1.0 (0.039)
Wheel Cylinder and Piston Clearance	mm (in)	–	0.15 (0.006)
REAR DRUM BRAKE ASSEMBLY			
Brake Drum Inside Diameter	mm (in)	228.6 (9.00)	230.0 (9.06)
		279.4 (11.00)	281.0 (11.06)
		300.0 (11.81)	301.5 (11.87)
		320.0 (12.60)	321.5 (12.66)
Brake Drum Run-out	mm (in)	0.13 (0.005) or less	–
Brake Lining Thickness or Rivet Depth	mm (in)	–	1.0 (0.039)
Wheel Cylinder and Piston Clearance	mm (in)	–	0.15 (0.006)
BRAKE PEDAL AND CONTROL			
Master Cylinder and Piston Clearance		0.11 – 0.195 (0.004 – 0.008)	0.22 (0.009)
	mm (in)	0.09 (0.0035)	0.14 (0.0055)
Safety Valve; Piston and Cylinder Body Clearance	mm (in)	–	0.17 (0.0067)
Hydromaster; Poppet Valve Body and Seat Clearance	mm (in)	1.4 - 2.6 (0.055 - 0.102)	–
Hydromaster; Hydraulic Piston and Cylinder Clearance	mm (in)	–	0.15 (0.0059)
Hydromaster; Relay Valve Piston and Fitting Clearance	mm (in)	–	0.1 (0.0039)
PARKING BRAKE			
Brake Drum Inside Diameter	mm (in)	178.0 (7.01)	179.0 (7.05)
		190.0 (7.48)	191.0 (7.52)
Brake Drum Run-out	mm (in)	0.05 (0.002) or less	–
Brake Lining Thickness	mm (in)	–	1.0 (0.039)
EXHAUST BRAKE			
Butterfly Valve and Body Clearance			
(4HF1 Engine)	mm (in)	0.4 – 0.6 (0.016 – 0.024)	–
(Other Engine)	mm (in)	0.1 – 0.2 (0.004 – 0.008)	–

SERVICING

CONTENTS

PAGE

Service Brakes 00-84
- Wheel Brake Adjustment 00-84
- Brake Pedal Adjustment 00-85
- Brake Bleeding 00-87
- Hydraulic Booster Line Bleeding 00-89

Parking Brake 00-92
- Parking Brake Adjustment 00-92

SERVICE BRAKES

Wheel Brake Adjustment

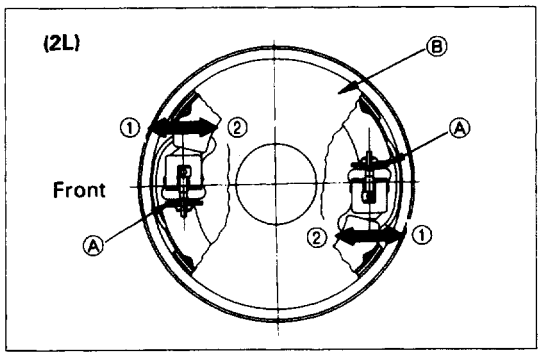

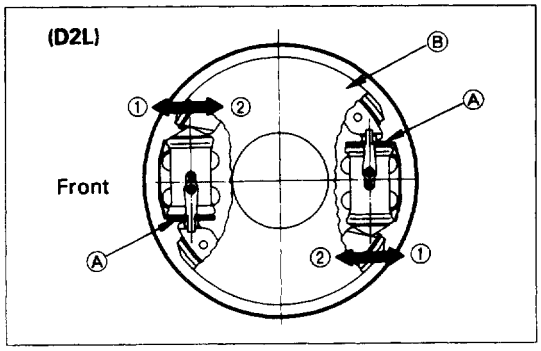

Brake Lining Clearance Adjustment (2L and D2L)

Without auto-adjuster type

1. Chock the wheels not being adjusted.
2. Jack up the axle until the wheels can be turned freely.
3. Manually shake the wheel to check for excessive play.
4. Remove the grommet fitted to one of the brake drum cover adjuster holes.
5. Insert a screwdriver into the adjuster hole.
   Manually rotate the wheel while turning the adjuster Ⓐ in the direction of the arrow 1 until resistance is felt at the wheel.
6. Back off the adjuster Ⓐ in the direction of the arrow 2 the specified number of notches.

Specified Notched

Front Rear	5 – 6

7. Install the grommet to the adjuster hole.
8. Repeat Steps 4 through 7 on the other wheels.
9. Lower the vehicle to the ground.

With auto-adjuster type

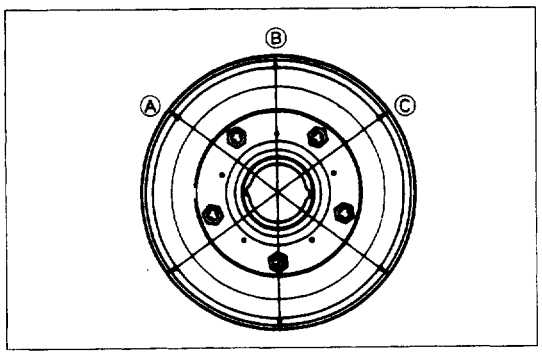

1. Measure the internal diameter of the brake drum.
   - Take measurement of the distance at Ⓐ, Ⓑ and Ⓒ points.

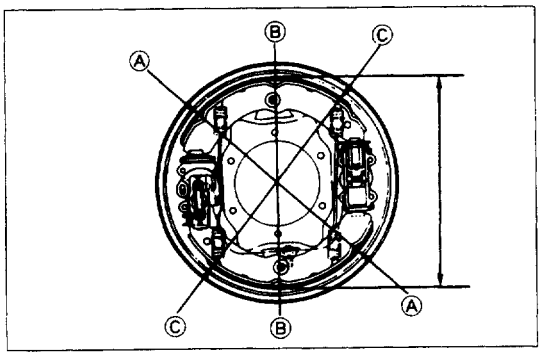

2. Measure the external diameter of the brake shoe.
   - Take measurement of the distance at Ⓐ, Ⓑ and Ⓒ points.
3. Turn the adjuster gear so that the difference between the internal diameter of the brake drum and the external diameter of the brake shoe becomes 0.6 mm.
4. Step on the brake hard while turning the brake drum in the forward direction, or while driving forward.

Brake Pedal Adjustment

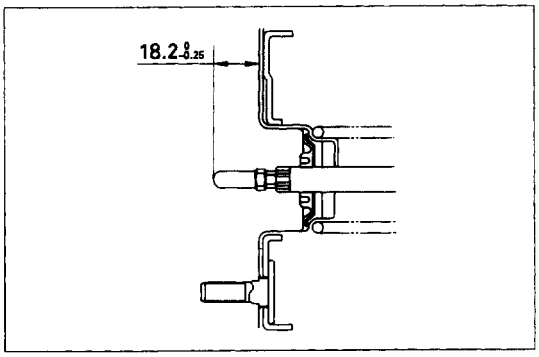

Brake Pedal Height and Free Play Adjustment

Vacuum Booster (Master Vac) Type:

The height of push rod should be adjusted so that the distance from its master cylinder mounting surface to end measures 18.2mm (0.717 in).

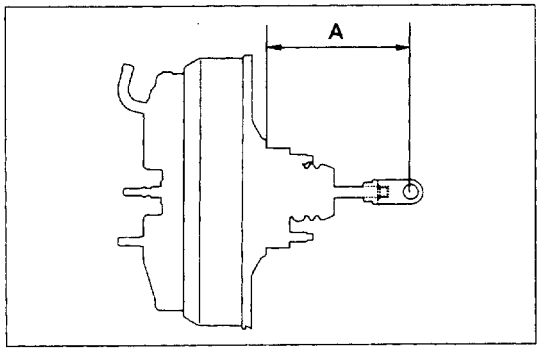

For push rod length adjustment, the distance from the center of crevis pin hole to brake pedal bracket mounting surface should be set at 109 mm (4.291 in); without spacer, 129 mm (5.079 in); with spacer.

When fixed under this condition, there is no need to adjust the height of brake pedal from floor and free play.

Note:

- **As vacuume booster (Master Vac) is undetachable type, it should be replaced as an assembly if does not work well.**
- **Be sure to adjust the stop light switch.**

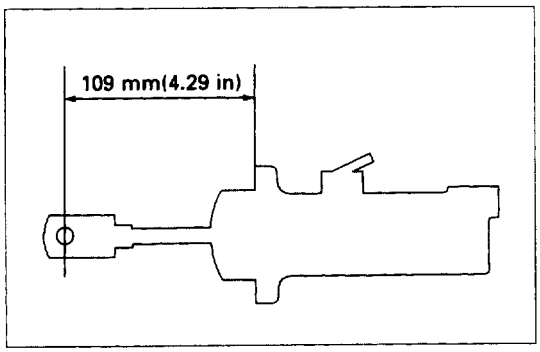

Hydromaster Type:

For push rod length adjustment, the distance from the center of crevis pin hole to brake pedal bracket mounting surface shoud be set at 109 mm (4.29 in).

When fixed under this condition, there is no need to adjust the height of brake pedal from floor and free play.

Note:

- **Be sure to adjust the stop light switch.**

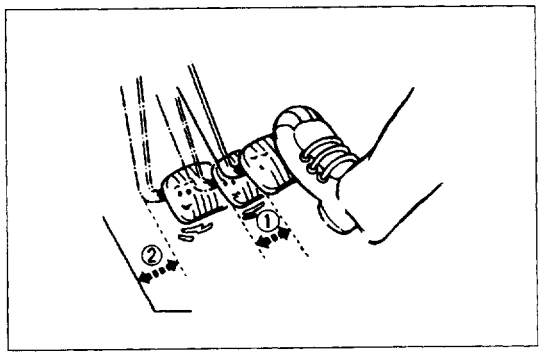

Brake pedal free play and allowance

Standard value: mm (in)

① Free play: 4 to 7 (0.16 to 0.28)

1 to 3 (0.04 to 0.12)...Hydromaster type

② Allowance:

mm (in)

NHR	Front Disc Brake Model		40 (1.57)
	Front Drum Brake Model		50 (1.97)
NKR	Front Disc Brake Model		40 (1.57)
	Front Drum Brake Model	GVM 6.5 ton	40 (1.57)
		Except GVM 6.5 ton	60 (2.36)
NPR NQR	Front Disc Brake Model		40 (1.57)
	Front Drum Brake Model	Less than GVM 7.0 ton	60 (2.36)
		GVM 7.0 ton or more	40 (1.57)
NQR	Hydromaster Model		50 (1.97)
NPS			40 (1.57)

(When depressed with force of the 50 kg (110 lbs).)

Hydraulic Booster Type

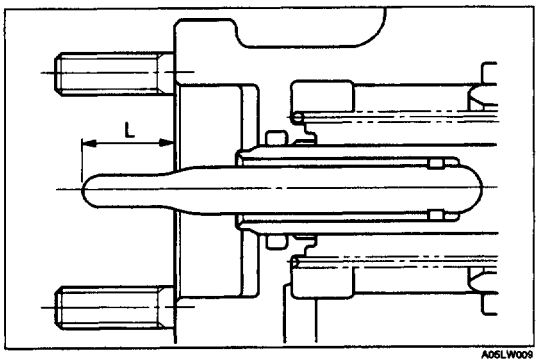

Push Rod Length

- Use a scale to measure the push rod length (push rod to flange face clearance).
  Push Rod Length "L" to 17.95 – 18.2 mm (0.707 – 0.717 in).
  If the push rod length is not equal to the specification, the hydraulic booster assembly must be replaced.

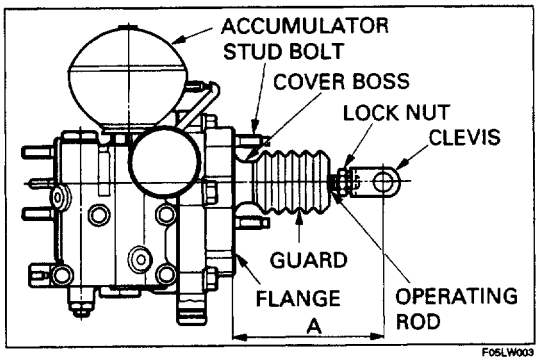

Operating Rod Length

1. Loosen the jam nut at the stop lamp switch.
2. Loosen the jam nut on the hydraulic booster operating rod
3. Turn the operating rod until the distance from the centre of clevis pin hole to mounting surface of the brake pedal bracket should be set at 109 ± 1 mm (4.29 ± 0.04 in).
   When fixed under this condition, there is no need to adjust the brake pedal height and free play.
4. Tighten the operating rod jam nut.

Jam Nut	N·m(kg·m / lb·ft)
	20 (2.0 / 14)

5. Stop lamp switch so that the end of the switch threaded portion contacts the brake pedal, then back-off the switch 1/2 turn.

Stop Lamp Switch Lock Nut	N·m(kg·m / lb·ft)
	20 (2.0 / 14)

6. Check brake pedal operation to be sure it's operating properly.

- Measure the brake pedal free play, after reducing the pressure of the hydraulic oil in the accumulator by pedal operations at least 10 times with engine off.
  Brake pedal normal play is between 21 – 24 mm (0.83 – 0.94 in).
- Pressing the brake pedal with a force of 294 N (66 lb) with the engine on, the clearance between the brake pedal and floor panel is more than 35 mm (1.4 in).
- Brake pedal height "B" is 167 mm (6.58 in) (reference)
- Brake pedal travel "A" is between 180 ± 5 mm (7.09 ± 0.2 in) (reference).

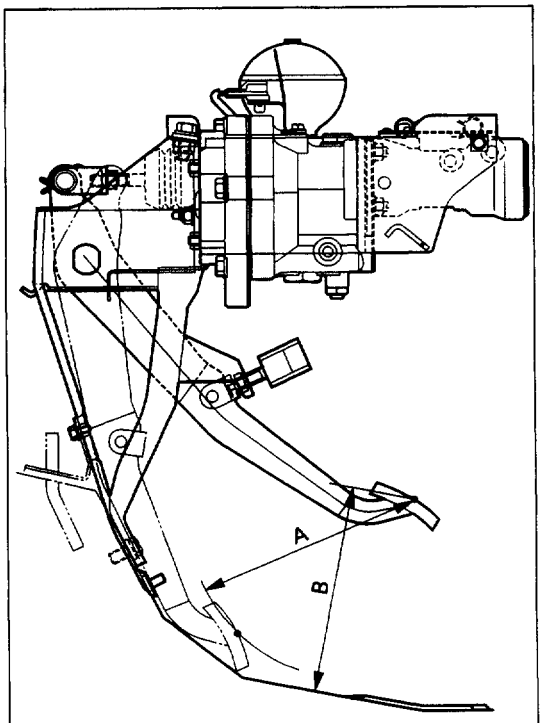

A. Pedal Travel
(Reference) .....180 ±5 mm (7.09 ±0.2 in)
B. Peadl Height
(Reference) .....167 mm (6.58 in)

310LW005

Brake Bleeding

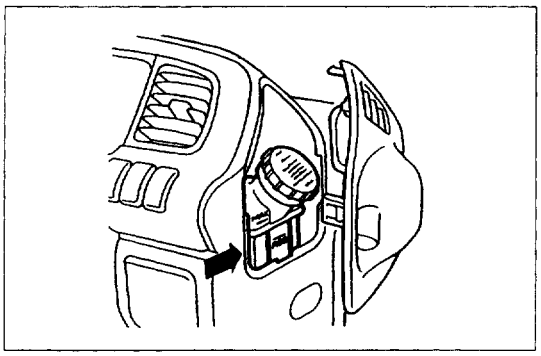

Brake Bleeding Precautions

Air in the brake hydraulic circuit will result in dangerous reduced braking efficiency.

The brake hydraulic circuit must be bled whenever the vehicle has been operated with the reservoir brake fluid level at an excessively low level or any time the brake pipes have been disconnected in the course of brake servicing.

The brake bleeding procedure requires the cooperative action of two men.

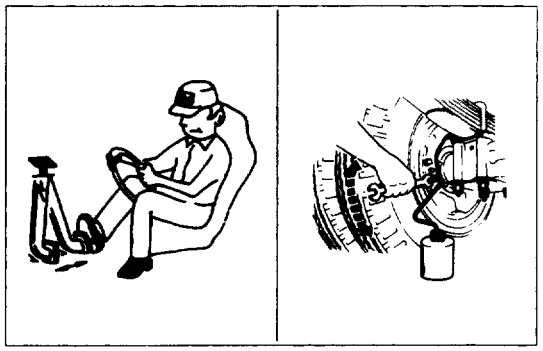

Brake Bleeding Procedure

Bleed the brake hydraulic circuit in the following sequence.

LHD

Right-hand rear wheel → DSPV or LSPV (If so equipped) → Right-hand front wheel → Left-hand front wheel → Hydromaster (If so equipped)

RHD

Right-hand rear wheel → DSPV or LSPV (If so equipped) → Left-hand front wheel → Right-hand front wheel → Hydromaster (If so equipped)

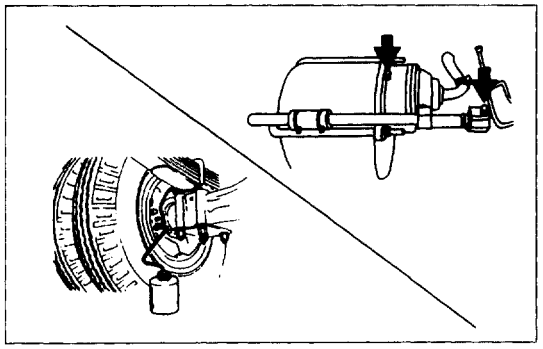

1. Check to make sure that the service area is well ventilated.

   Start the engine and allow it to run until the vacuum pressure rises sufficiently.

Notes:

Brake booster (master-vac or hydromaster) will be adversely effected if bleeding operation is performed without running engine.

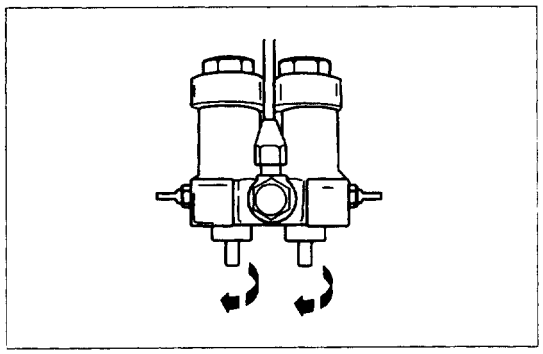

If the vehicles is equipped with hydromaster, turn the bleeder valves on the safety valves counterclockwise (on front and rear brake circiuts) until they are brought into light contact with the stoppers.

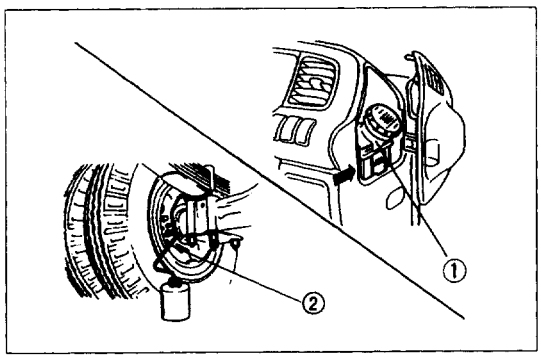

2. Fill the brake fluid reservoir ① up to the "MAX" level with clean brake fluid.

   It may be necessary to replenish the brake fluid reservoir several times during the bleeding procedure to maintain the required level of brake fluid.

Note:

Pour the brake fluid carefully so as not to produce air bubbles.

3. Remove the right hand rear wheel cylinder bleeder screw rubber cap and wipe it clean.
4. Connect one end of a vinyl tube ② to the bleeder screw.
5. Insert the other end of the vinyl tube into a transparent container approximately 1/3 full of brake fluid.
6. Pump the brake pedal ③ several times and hold it depressed.

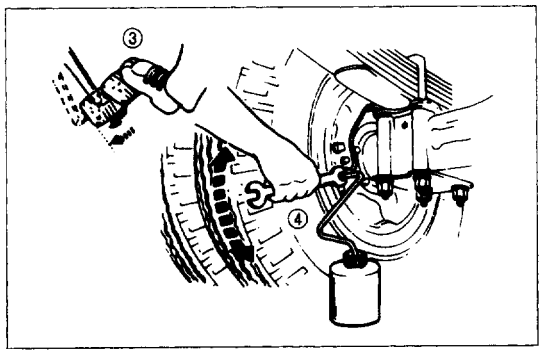

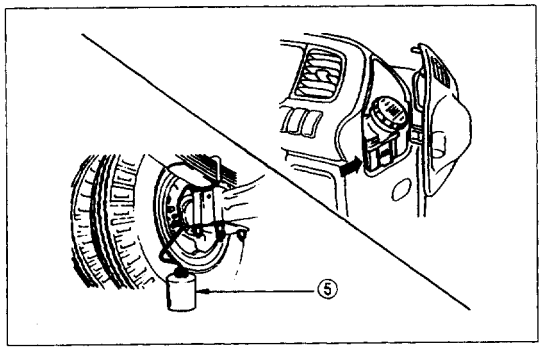

7. Loosen the bleeder screw ④ approximately 1/2 of a turn.

   This will release the brake fluid with air bubbles into the transparent container ⑤.
8. When the brake fluid being released into the transparent container is completely free of air bubbles, retighten the bleeder screw ④.
9. Slowly release the brake pedal.
10. Replace the bleeder screw rubber cap.

Notes:

- **Be sure to maintain the brake fluid reservoir level at ll times during the bleeding procedure. Replenish the brake fluid as required.**

11. Repeat Steps 3 through 10 for each bleeder screws as mentioned before.

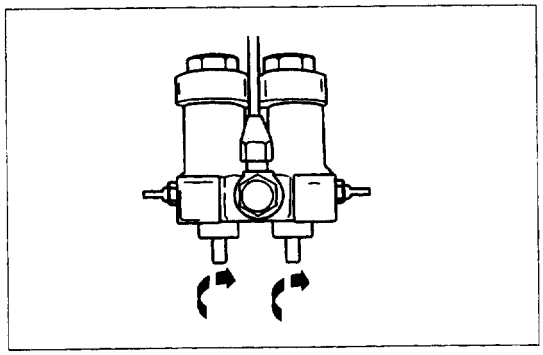

Notes:

If the vehicle is equipped with hydromaster, securely tighten the bleeder valve on the safety valves. If this operation is omitted, the brakes will be held in normal function but the safety valves will be held out of service.

Hydraulic Booster Line Bleeding

Bleeding Precautions

After removing the hydro boost assembly or piping and making repairs, do not run the vehicle until you perform the below-described air bleeding and then verify that everything is normal, including hydro boost boosting and accumulator operation.

Bleeding Procedure

1. Attach the hydro boost and the master cylinder to the vehicle and connect the piping.
2. Fill the hydro boost reservoir with hydraulic oil between its minimum and maximum range.
3. Turn the engine on for about 5 seconds.
4. Then turn the engine off and check the quantity of hydraulic oil in the reservoir.
5. If the hydraulic oil is below the minimum, pour in more hydraulic oil so that it is in the range from minimum to maximum.
6. Repeat the above steps 2 – 5 until there is no foaming or change in the level of the hydraulic oil in the reservoir. But if the hydraulic oil foams during the above steps, let it stand for a while, wait for the foam to dissipate, then continue the work.
7. With the engine on, repeatedly press the brake pedal slowly about five times.
8. Then turn the engine off and check the quantity of hydraulic oil in the reservoir. If the hydraulic oil is below the minimum, once again pour in more hydraulic oil so that it is in the range from minimum to maximum.
9. Leaving the engine off, repeatedly press the brake pedal at least ten times.
10. Verify that there is no foam or change in the level of the hydraulic oil in the reservoir. If any foam remains, let it stand for a while, wait for the foam to dissipate, then repeat the above steps 7 – 9.
11. If it is necessary at this time to bleed out the air from the brake fluid pressure system, such as the master cylinder or the wheel cylinder, be sure to first complete step 10 above and make sure that the engine is on.
12. With the engine on, strongly press the brake pedal as far as the booster full load region slowly and repeatedly about 30 times, (for 1 – 3 seconds each time). When doing so, do not keep the pedal at the full load region (no longer than 1 second).
13. Then turn the engine off and repeatedly press the brake pedal at least 10 times.
14. Check the state of the hydraulic oil in the reservoir, and if there is no foaming or change in the level of the oil, the operation of bleeding the air out is considered completed. If any foam remains, let it stand for a while, wait for the foam to dissipate, then repeat the above steps 12 – 13.

Notes:

Precautions when bleeding the air from the brake fluid pressure system

When doing air bleeding of the brake fluid pressure system, such as the master cylinder or wheel cylinder, verify that the air has been bled out of the hydro boost, and make sure that the engine is on.

Be aware that if air bleeding of the brake fluid system is to be done with the engine off, air bleeding cannot be done.

If air bleeding of the brake fluid pressure system is to be done at the same time as air bleeding of the hydro boost, do so when the operation of the above hydro boost air bleeding method 10 has been complete.

Supply Parts Replacement

1. The hydro boost is a precision part that operates with high-pressure hydraulic oil. Never remove any parts from the hydro boost except replacement parts. Trouble may occur if a part other than a replacement part is removed and a non-matching part is included or the assembly is bad. For example, misoperation may occur and the brake becomes ineffective, or a bad seal may allow high-temperature hydraulic oil under high pressure to spatter and cause a burn.
2. The hydraulic oil to be used for the hydra boost is ATF DEXRON® III. Using any other hydraulic oil could adversely affect the rubber parts and cause poor operation or oil leakage.
   In particular, the hydraulic oil for the hydro boost is quite different from the brake fluid that is used in the master cylinder.
   Be careful that hydro boost parts do not come into contact with the brake fluid for the master cylinder, and that master cylinder parts do not come into contact with the hydraulic oil for the hydro boost.
   Any mixing together of the hydraulic oil for the hydro boost and the brake fluid for the master cylinder could cause degradation such as the swelling of rubber parts, brake failure due to oil leakage or bad operation, or a serious mishap such as a vehicle fire caused by brake friction.
3. Operation of the pump while the engine is on will cause the hydro boost hydraulic oil to get hot. In particular, frequent repeated operation of the brake will sometimes increase the temperature of the hydraulic oil in the hydro boost assembly to 100°C or more. Be careful in handling.
   When performing work such as removing the hydro boost assembly from the vehicle, before starting the work, first turn the engine off, wait 30 minutes, and verify that the temperature has cooled off.
4. Even when a long time passes after the engine is turned off, the high-pressure hydraulic oil in the accumulator of the hydro boost remains stored under pressure.

Before removing the hydro boost assembly or piping, be sure to repeatedly press the brake pedal at least ten times with the engine off, and make sure the pressure of the hydraulic oil in the accumulator has been reduced to atmospheric pressure before doing the work.
In particular, when removing the replacement-part accumulator from the hydro boost assembly, the hydraulic oil may spatter if it remains stored under high pressure inside the accumulator, so be careful of this.

PARKING BRAKE

Parking Brake Adjustment

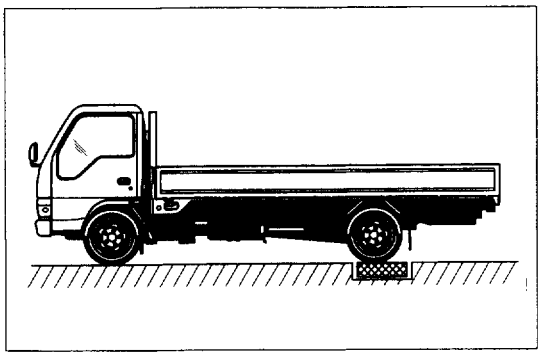

Before beginning to adjust the parking brake, park the vehicle on a level surface, chock all of the wheels, and place the parking brake lever in the released (off) position.

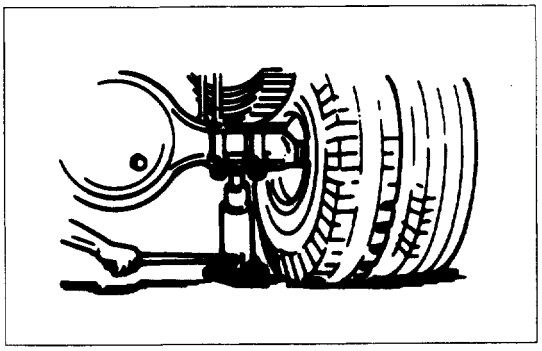

Parking Brake Lining Clearance Adjustment

1. Jack up the rear axle until the wheels can be turned freely.
2. Remove one of the two check hole covers from the parking brake drum.
3. Rotate the brake drum to align the check hole with the adjusting screw.
4. More the camshaft lever from side to side several times to center the brake shoes.

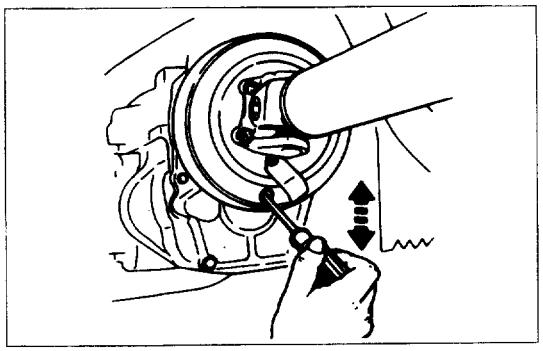

5. Insert a screwdriver into the check hole and rotate the adjusting screw by pushing it upward.

   Continue doing this until the brake shoes begin to drag on the drum.
6. Back off the adjusting screw the specified number of notches.

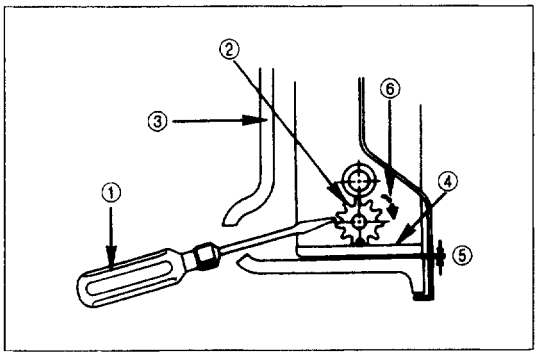

Adjusting Screw Notches and Clearance

Notches	Clearance mm (in)
30	0.75 (0.029)

1 Screwdriver
2 Adjusting screw
3 Brake drum
4 Brake shoe
5 Clearance
6 Direction of brake shoe expansion

7. Reinstall the check hole cover.
8. Lower the rear wheels to the floor.

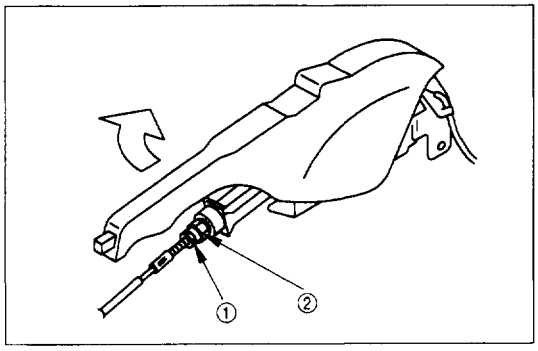

Parking Brake Lever Travel Adjustment

1. Fully set the parking brake lever and release it several times.
   Leave the parking brake lever in the released position.
2. Loosen the parking brake control wire lock nut ①.
3. Turn the adjuster ② to adjust the lever travel to the specified notches.

Parking brake lever travel at 15 kg (33 lbs/147 N) notches
5 to 8

4. Retighten the control wire lock nut 1.
5. Check the parking brake lever travel (measured in notches).

FIXING TORQUE

Front Wheel Brake (NHR·NKR·NPR·NQR)

N·m (kg·m/lb·ft)

Drum Inside Dia. mm (in)	Lining Width mm (in)	Fixing Torque
279.4 (11.00)	60 (2.36)	27 (2.8 / 20)
300.0 (11.81)	75 (2.95)	34 (3.5 / 25)
320.0 (12.60)		43 (4.4 / 32)
320.0 (12.60)	100 (3.94)	74 (7.5 / 54)
320.0 (12.60)	120 (4.72)	94 (9.5 / 69)

Lining Width mm (in)	Fixing Torque
60 (2.36)	69 (7.0 / 51)
75 (2.95)	
100 (3.94)	
120 (4.72)	157 (16.0 / 116)

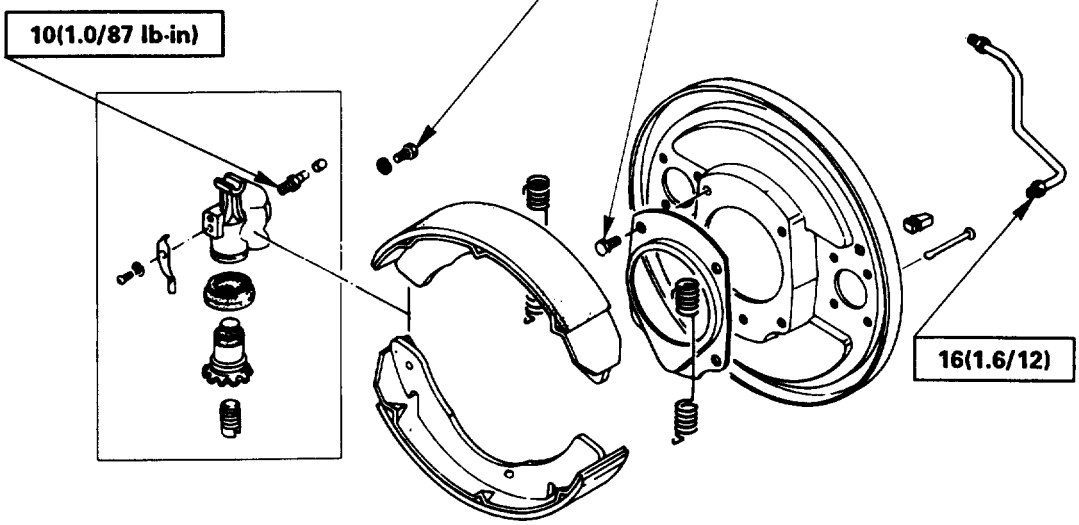

Front Wheel Brake (NPS66)

N·m (kg·m/lb·ft)

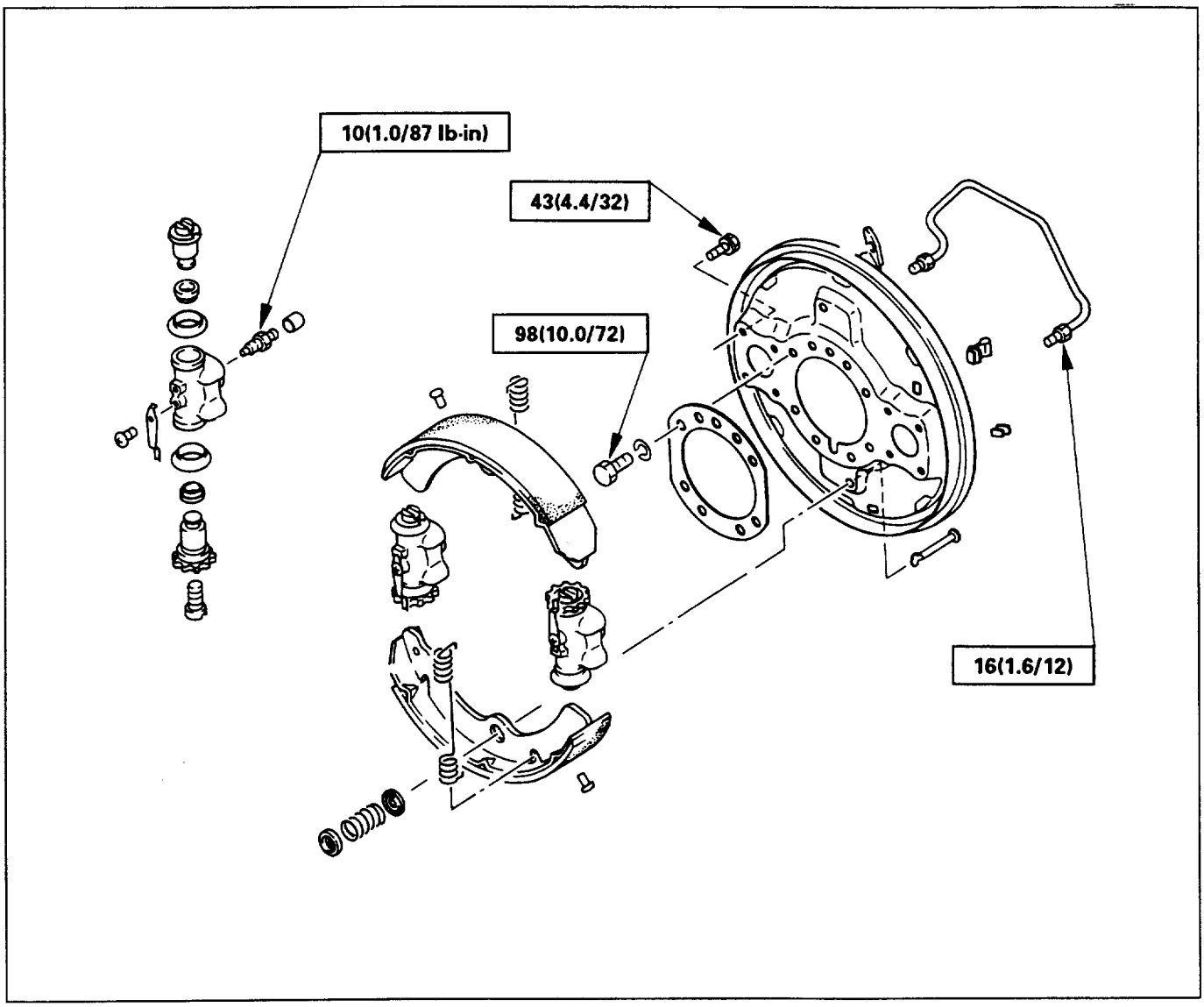

Rear Wheel Brake

N·m (kg·m/lb·ft)

Drum Inside Dia. mm (in)	Lining Width mm (in)	—
228.6 (9.00)	75 (2.95)	108 (11.0 / 80)
279.4 (11.00)	60 (2.36)	74 (7.5 / 54)
300.0 (11.81)	75 (2.95)	* 44 (4.5 / 33) **108 (11.0 / 80)
320.0 (12.60)	75 (2.95) 100 (3.94)	108 (11.0 / 80)
	120 (4.72)	157 (16.0 / 116)

*Single Tire models ** Dual tire models

Drum Inside Dia. mm (in)	Lining Width mm (in)	—
228.6 (9.00)	75 (2.95)	34 (3.5 / 25)
279.4 (11.00)	60 (2.36)	27 (2.8 / 20)
300.0 (11.81)	75 (2.95)	34 (3.5 / 25)
320.0 (12.60)	75 (2.95)	43 (4.4 / 32)
	100 (3.94)	94 (9.6 / 69)
	120 (4.72)	94 (9.6 / 69)

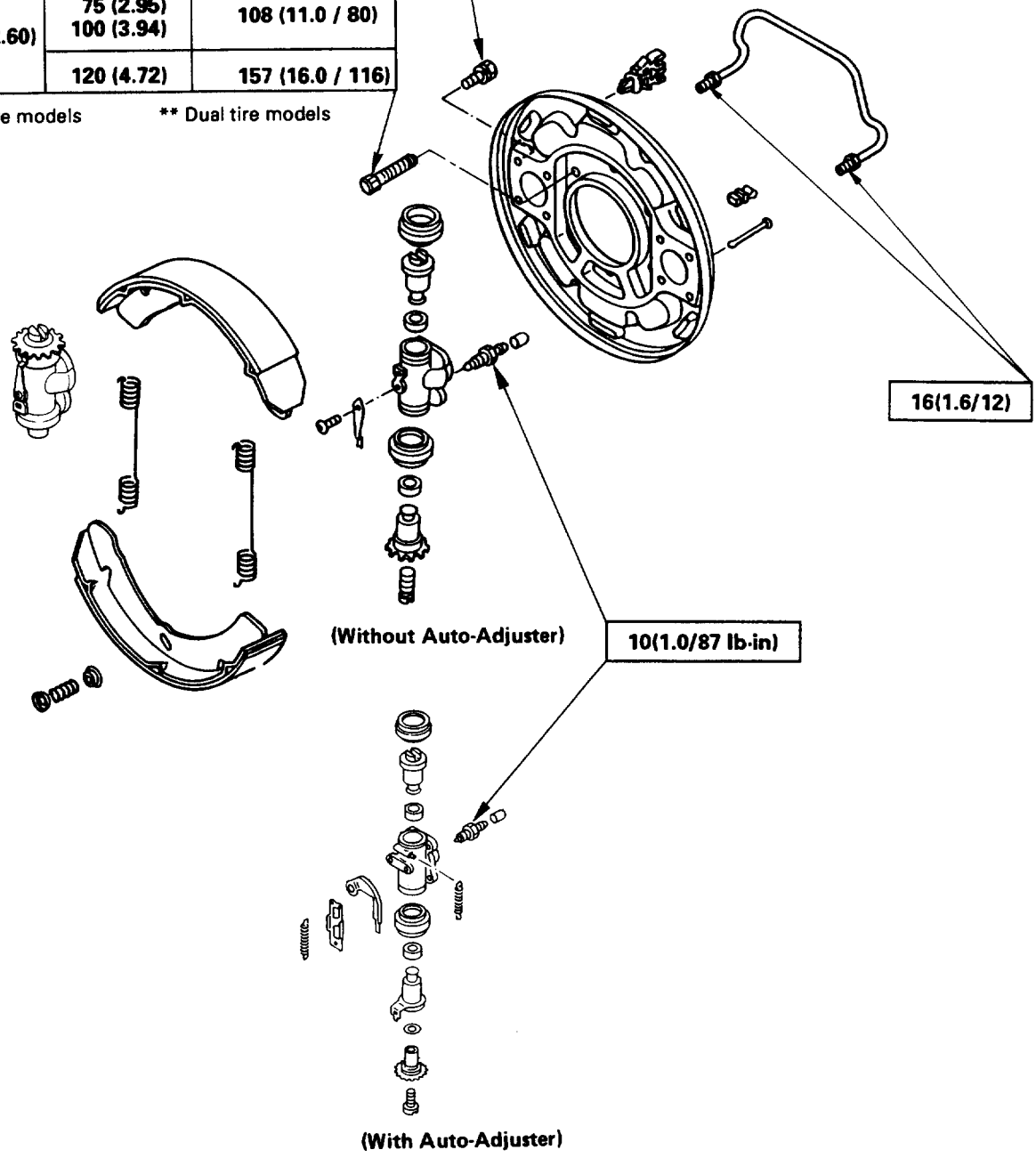

Front Disc Brake (NHR·NKR·NPR)

N·m (kg·m/lb·ft)

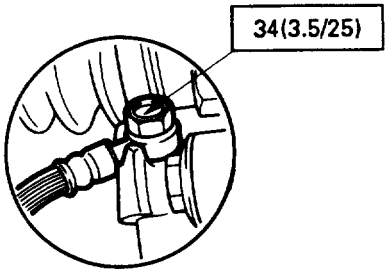

Leaf Spring Suspension Models (Rigid Axle Type)

ϕ 282 mm

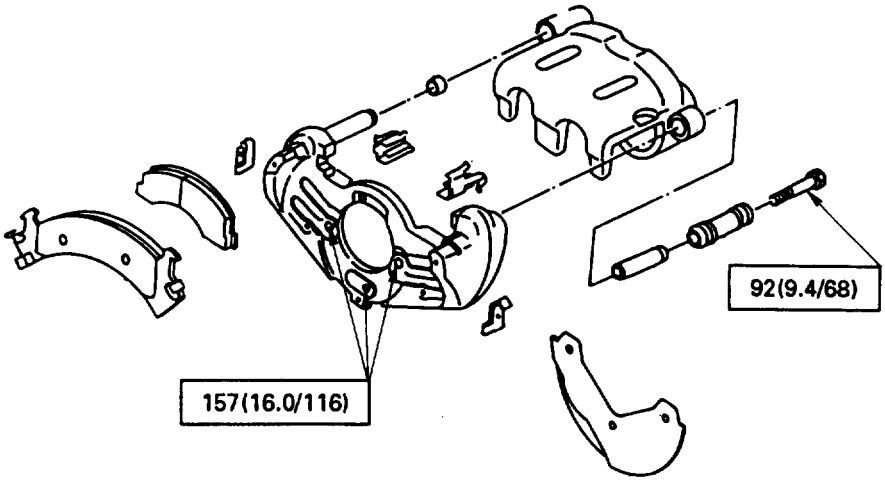

ϕ 310 mm

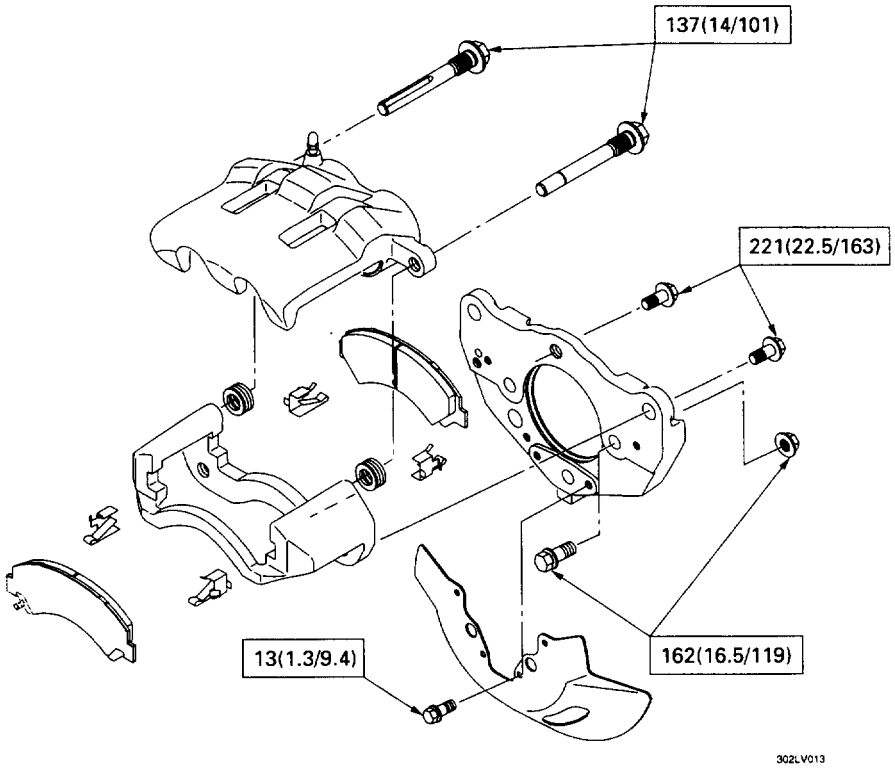

Front Disc Brake (NHR·NKR·NPR)

N·m (kg·m/lb·ft)

Independent Suspension Models

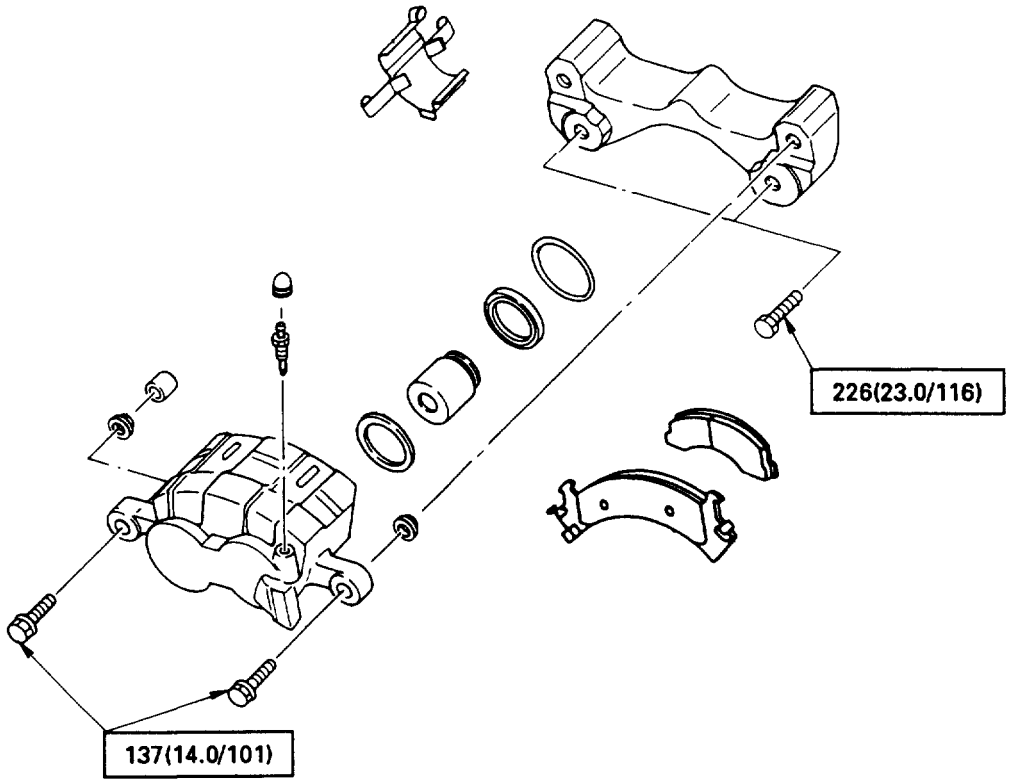

Brake Pedal and Control

N·m (kg·m/lb·ft)

Vacuum Booster Type

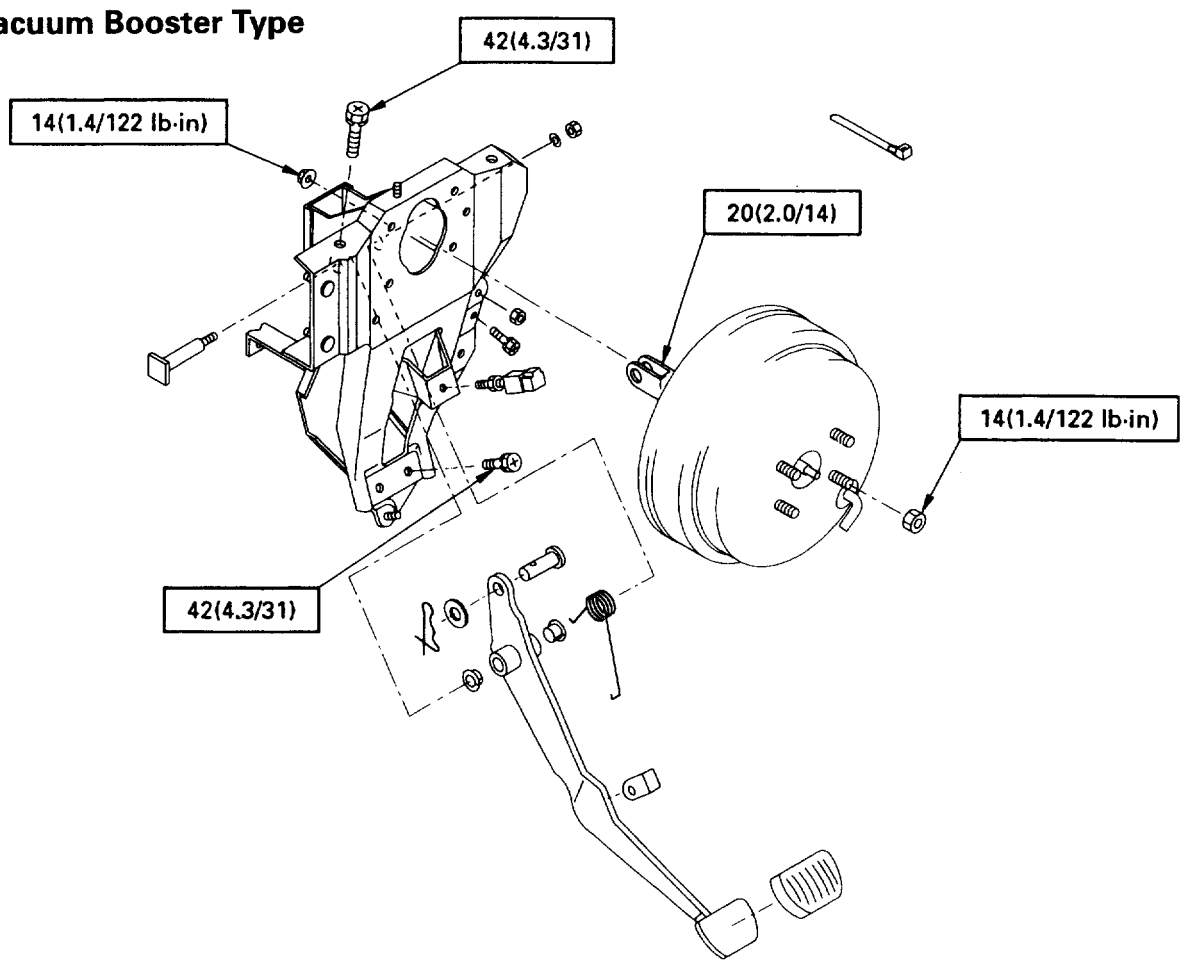

NKR	ø 28.5mm	40(4.1/30)
NPR NQR	ø 31.7mm	44(4.5/33)

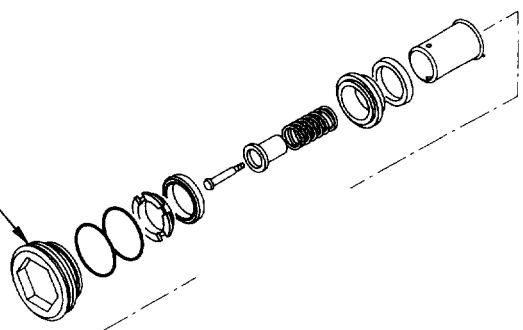

NQR with Hydromaster

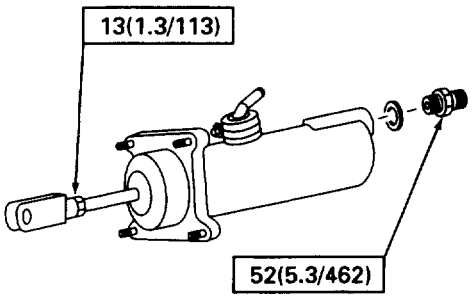

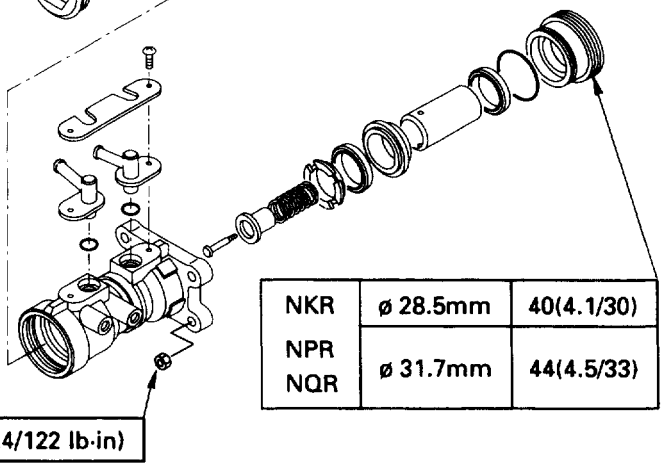

NKR	ø 28.5mm	40(4.1/30)
NPR NQR	ø 31.7mm	44(4.5/33)

N·m (kg·m/lb·ft)

Hydraulic Booster Type

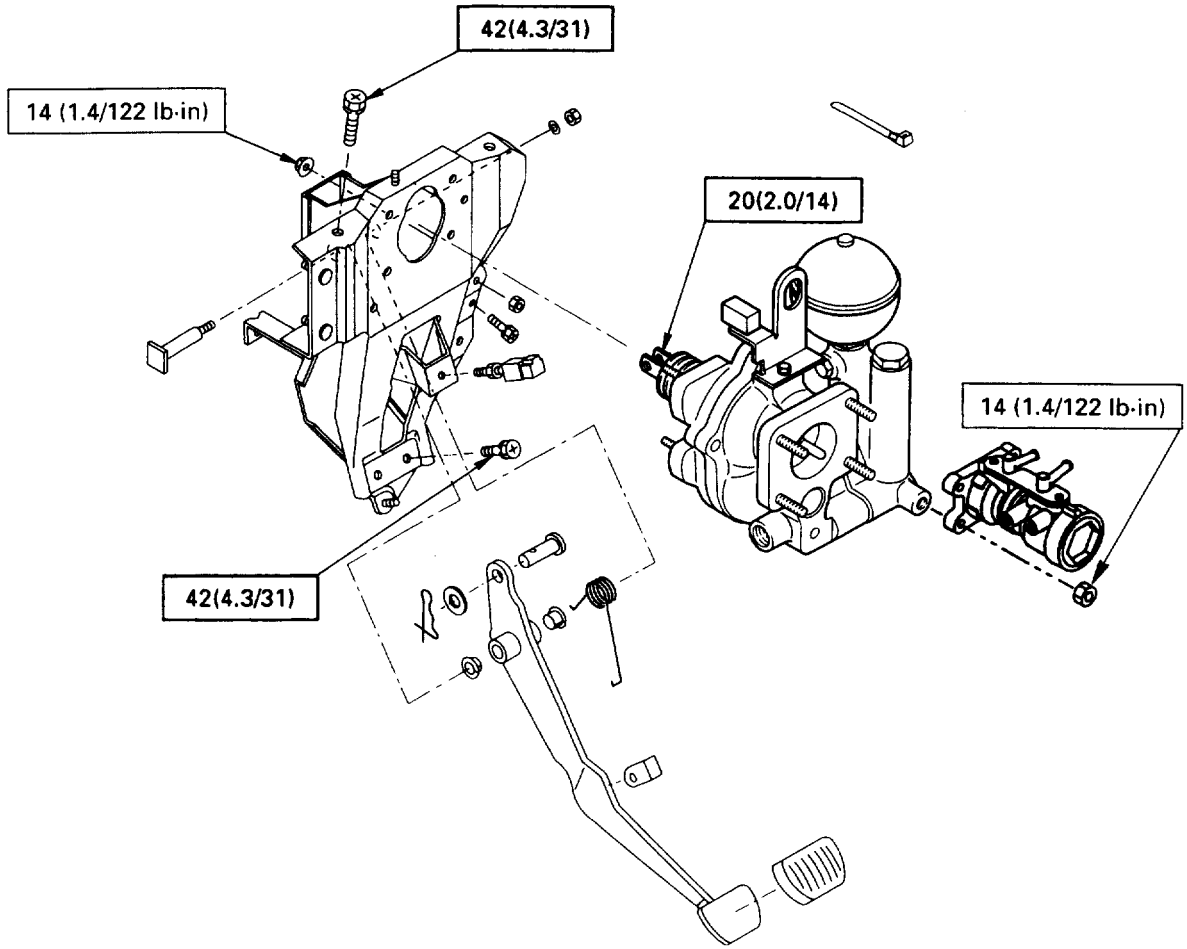

Exhaust Brake

N·m (kg·m/lb·ft)

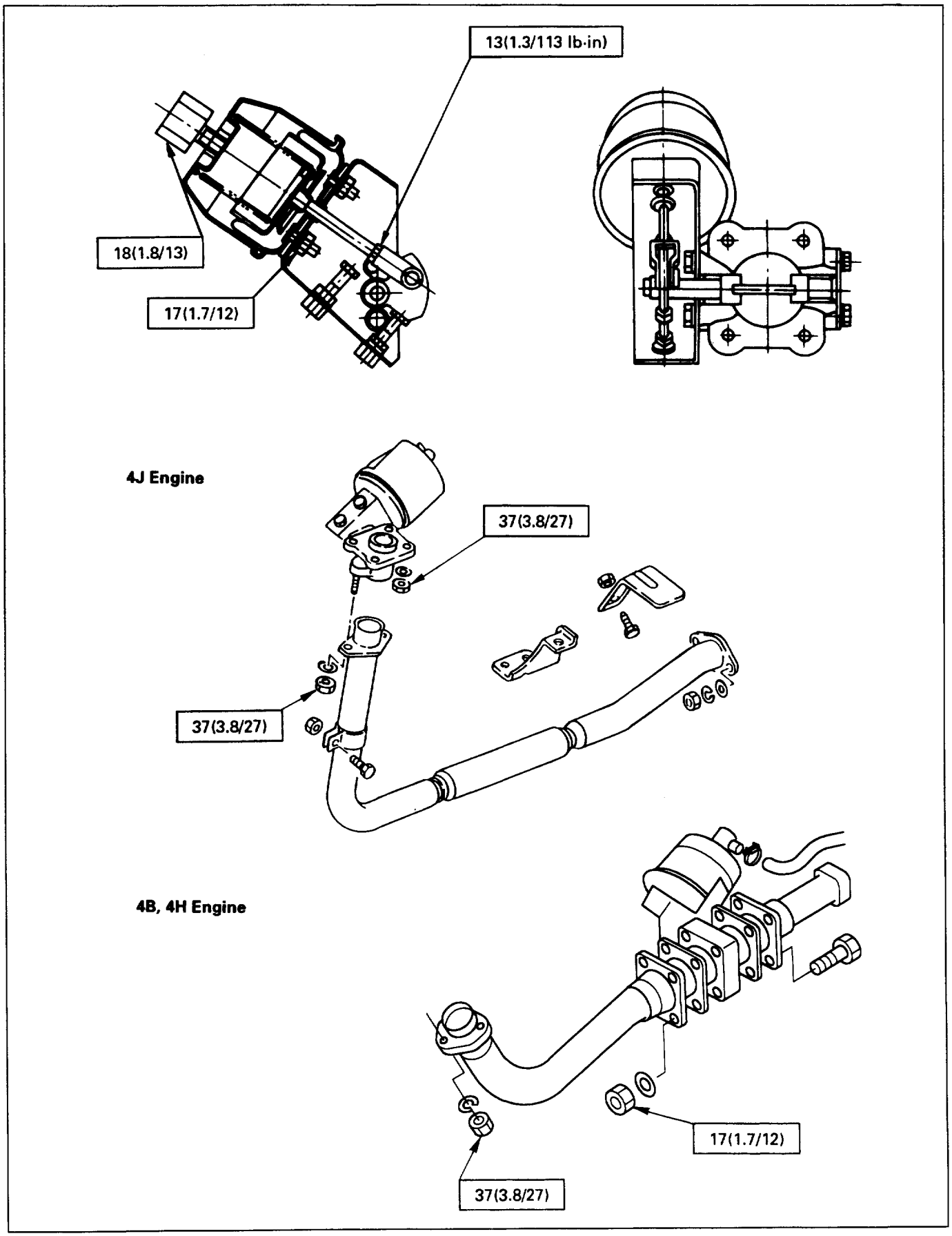

Parking Brake Drum

N·m (kg·m/lb·ft)

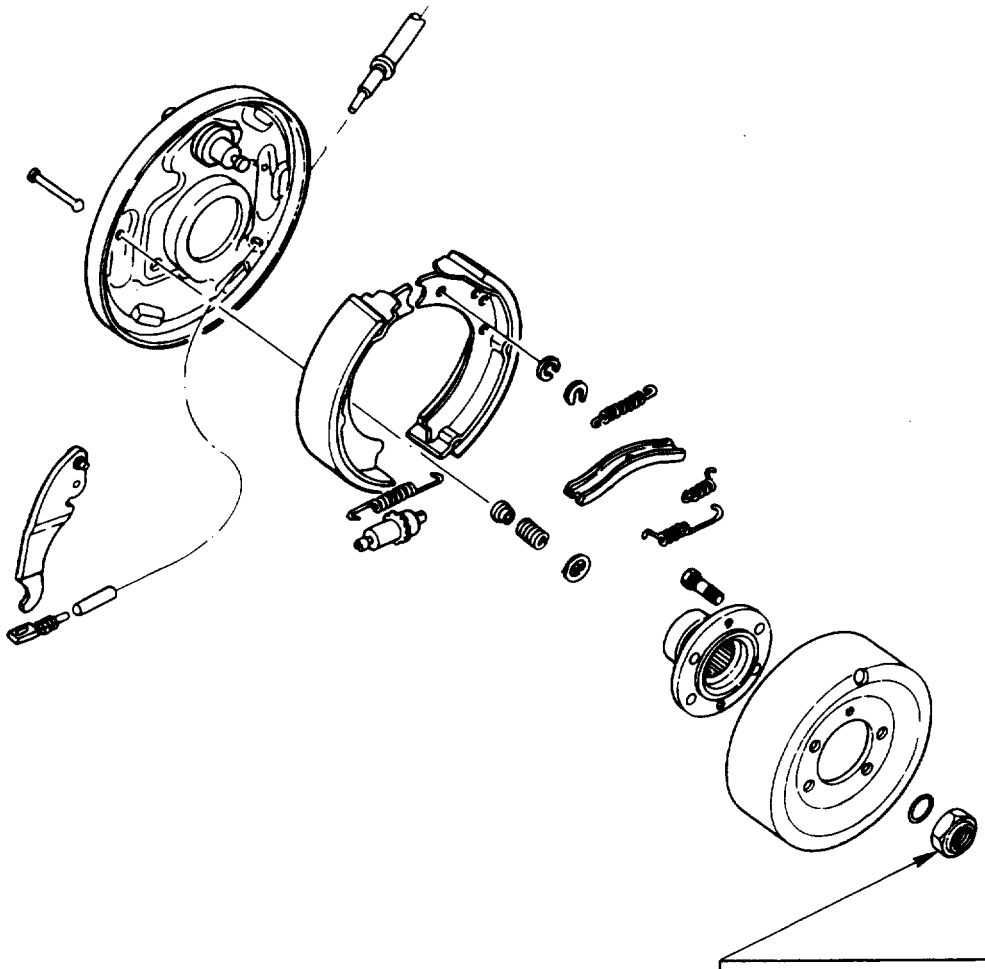

MSA, MSB, MXA (M/T)	226 (23.0/166)
MBP (M/T)	588 (60/434)
JR403E (AT)	123 (12.5/90)

Hydromaster

N·m (kg·m/lb·ft)

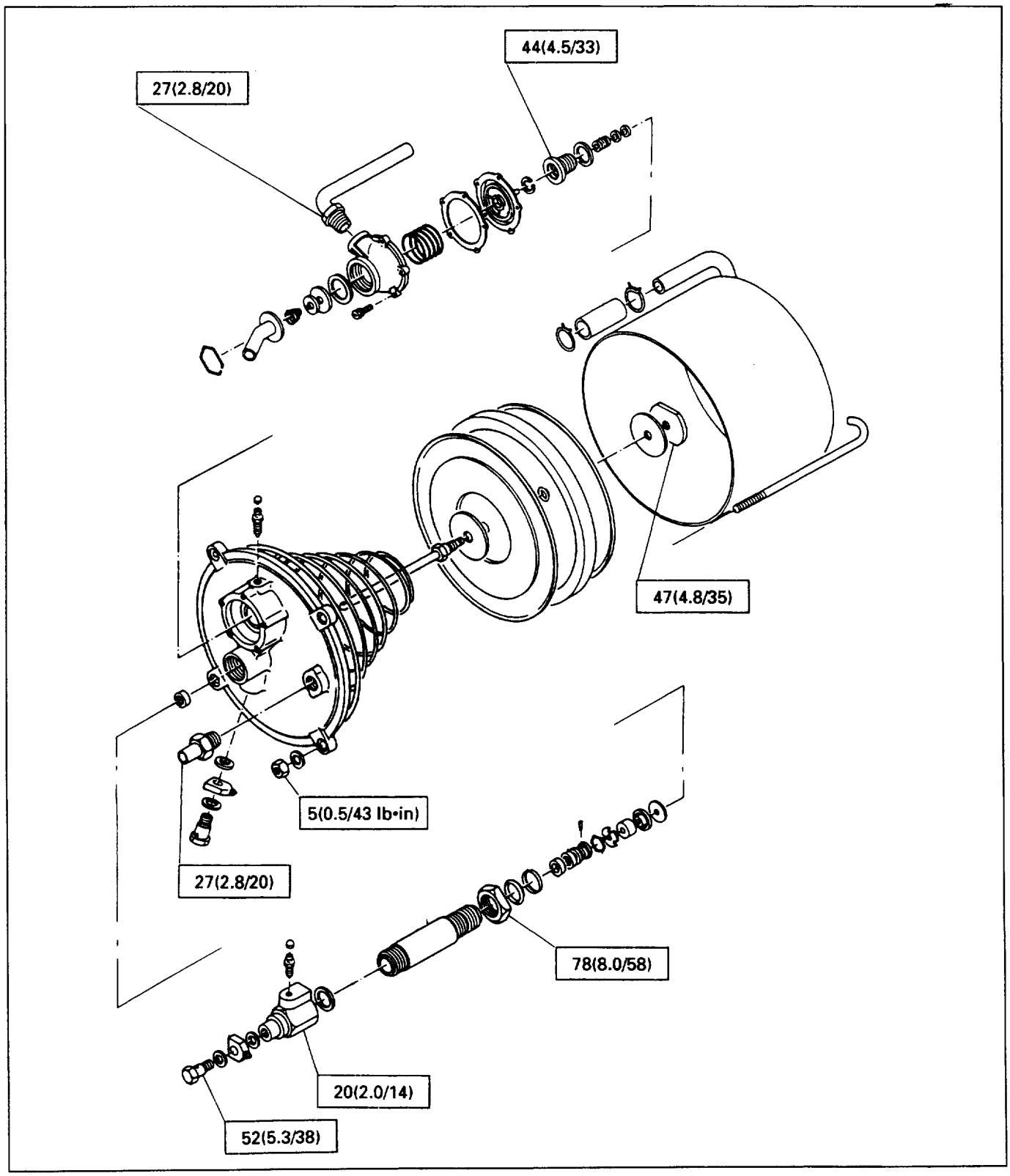

Safety Valve

N·m (kg·m/lb·ft)

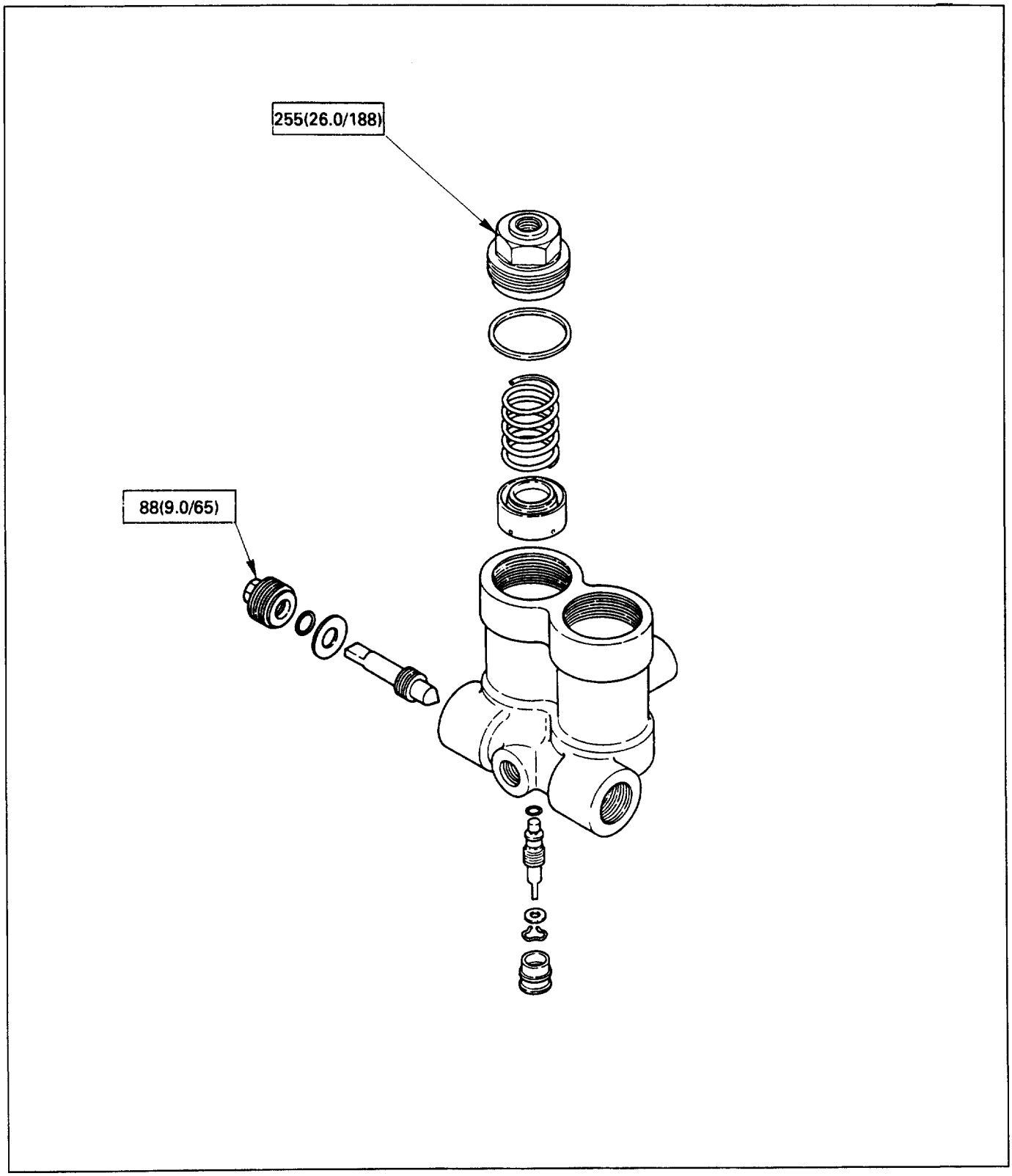

SPECIAL TOOLS

ILLUSTRATION	PART NO. ISUZU	PART NAME	SERVICE BRAKE	EXHAUST BRAKE
	5-8840-2371-0	Master Cylinder Support plate	●	—
	5-8840-2370-0	Wrench (Cylinder inside diameter 31.7 ø)	●	—
	5-8840-2369-0	Wrench (Cylinder inside diameter 28.5 ø)	●	—
	5-8840-0279-0	Vacuum pump	—	●
	5-8840-2215-0	Remover: steering wheel	●	—
	5-8840-2190-0	Pressure Gauge: brake fluid	●	—

SECTION 5A
HYDRAULIC BRAKES

CONTENTS

PAGE

General Description . . . . . 5A - 4
On-vehicle Service . . . . . 5A - 20
Front Disc Brake Assembly . . . . . 5A - 20
Leaf Spring Suspension Models (ϕ282mm) . . . . . 5A - 20
Removal . . . . . 5A - 20
Inspection and Repair . . . . . 5A - 22
Installation . . . . . 5A - 24
Front Disc Brake Pad Replacement . . . . . 5A - 28
Leaf Spring Suspension Models (ϕ293 & ϕ310mm) . . . . . 5A - 29
Removal . . . . . 5A - 29
Inspection and Repair . . . . . 5A - 31
Installation . . . . . 5A - 33
Front Disc Brake Pad Replacement . . . . . 5A - 37
Independent Suspension Models (NHR and NKR) . . . . . 5A - 38
Removal . . . . . 5A - 38
Inspection and Repair . . . . . 5A - 41
Installation . . . . . 5A - 43
Front Drum Brake Assembly . . . . . 5A - 45
Two Leading and Dual Two Leading . . . . . 5A - 45
Removal . . . . . 5A - 45
Inspection and Repair . . . . . 5A - 48
Installation . . . . . 5A - 50
Rear Drum Brake Assembly . . . . . 5A - 54
Removal . . . . . 5A - 54
Inspection and Repair . . . . . 5A - 57
Installation . . . . . 5A - 59

Brake Pedal and Control . . . . . 5A - 63
Brake Vacuum Booster and Brake Pedal Assembly . . . . . 5A - 63
Removal . . . . . 5A - 63
Installation . . . . . 5A - 66
Master Cylinder Assembly . . . . . 5A - 70
Removal . . . . . 5A - 70
Installation . . . . . 5A - 72
Hydraulic Booster and Brake Pedal Assembly . . . . . 5A - 74
Removal . . . . . 5A - 74
Installation . . . . . 5A - 77
Hydraulic Booster . . . . . 5A - 79
Removal . . . . . 5A - 79
Installation . . . . . 5A - 81
Accumulator and O-ring Replacement . . . . . 5A - 83
Clevis and Lock Nut Replacement . . . . . 5A - 85
Guard Replacement . . . . . 5A - 86
Load Sensing Proportioning Valve . . . . . 5A - 87
Removal . . . . . 5A - 87
Installation . . . . . 5A - 88
Load Sensing Proportioning Valve Adjustment . . . . . 5A - 89
Deceleration Sensing Proportioning Valve . . . . . 5A - 92
Unit Repair . . . . . 5A - 93
Wheel Cylinder Assembly . . . . . 5A - 93
Disassembly . . . . . 5A - 93
Inspection and Repair . . . . . 5A - 94
Reassembly . . . . . 5A - 95
Wheel Cylinder Assembly (Without Auto-adjuster) . . . . . 5A - 97
Disassembly . . . . . 5A - 97
Inspection and Repair . . . . . 5A - 98
Reassembly . . . . . 5A - 99
Wheel Cylinder Assembly (With Auto-adjuster) . . . . . 5A - 101
Disassembly . . . . . 5A - 101
Inspection and Repair . . . . . 5A - 102
Reassembly . . . . . 5A - 103

Master Cylinder Assembly (NHR) . . . . . 5A - 107
Disassembly . . . . . 5A - 107
Inspection and Repair . . . . . 5A - 108
Reassembly . . . . . 5A - 109
Master Cylinder Assembly (NKR•NPR•NQR without Hydromaster) . . . . . 5A - 111
Disassembly . . . . . 5A - 111
Inspection and Repair . . . . . 5A - 113
Reassembly . . . . . 5A - 114
Master Cylinder Assembly (NQR with Hydromaster) . . . . . 5A - 118
Disassembly . . . . . 5A - 118
Inspection and Repair . . . . . 5A - 119
Reassembly . . . . . 5A - 120
Hydromaster . . . . . 5A - 122
Safety Valve . . . . . 5A - 144

GENERAL DESCRIPTION

Hydraulic Brake System

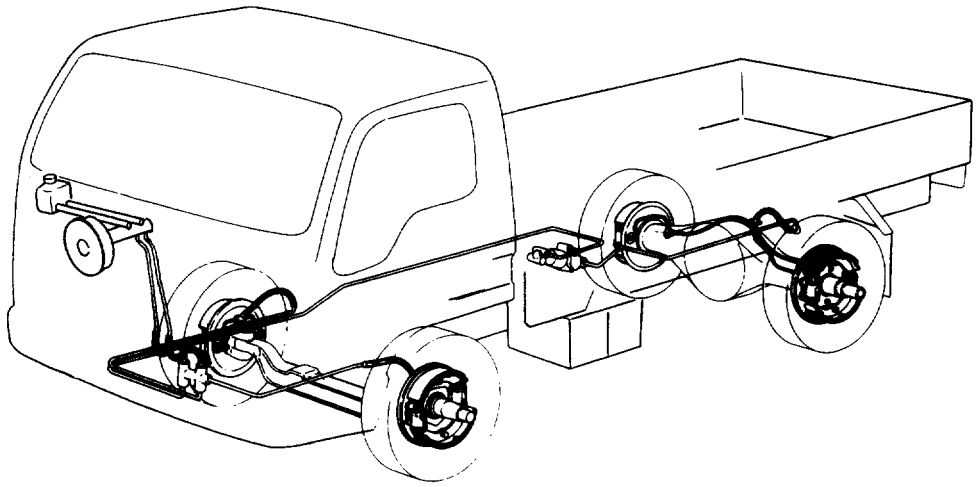

The brake system has dual hydraulic circuit with vacuum booster (Master-vac).

The master cylinders and the wheel cylinders at the front and rear of the vehicle are connected by steel piping and flexible hoses.

The vacuum booster is connected to the vacuum pump the through the vacuum tank. This provides the most effective vacuum assist.

Hydraulic Booster Brake System

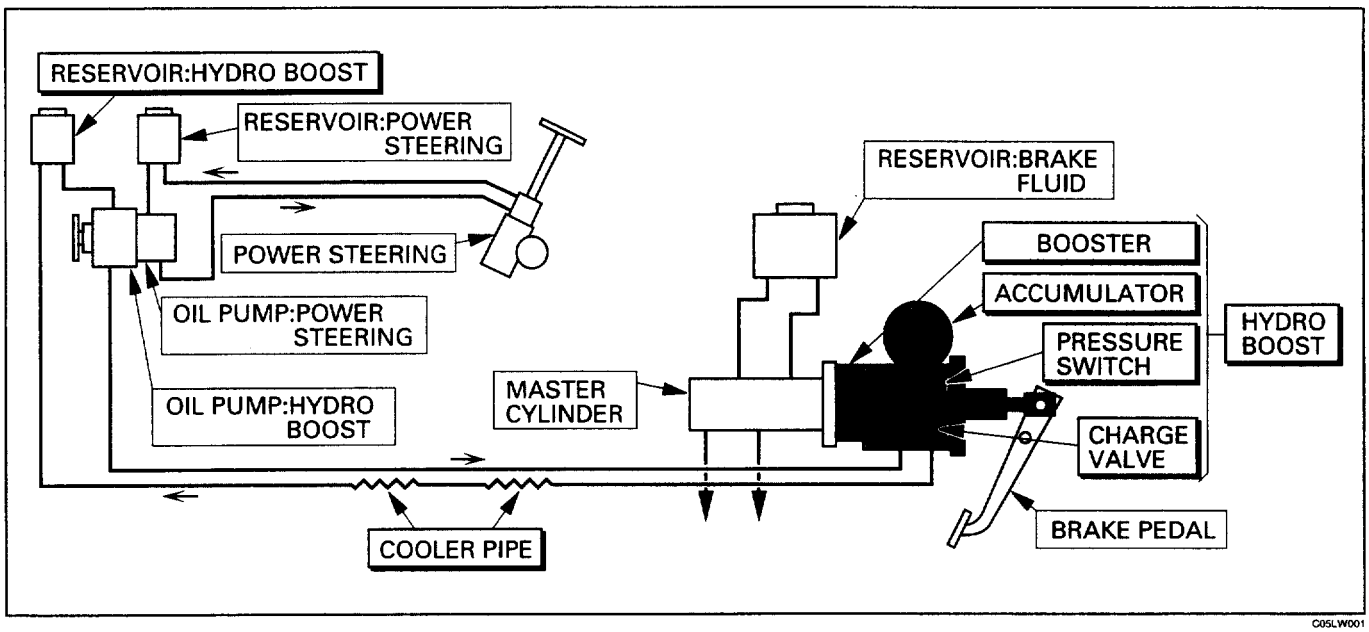

The Hydro Boost system, which functions as a brake force boosting device that allows the brake to be operated with less force than otherwise, includes the Hydro Boost, which has the booster, accumulator, charge valve, and pressure switch in an integrated structure, a reservoir, and a cooler pipe.

Functions of the main constituent parts

Booster:	Controls the hydraulic oil ejected from the oil pump and amplifies the force on the pedal.
Accumulator:	Accumulates the hydraulic oil under pressure for the boosting operation after the pump stops.
Charge valve:	Performs switching operation and feeds the hydraulic oil to the accumulator when the accumulator oil pressure declines.
Pressure switch:	Detects that the accumulator oil pressure has declined to the warning set pressure and operates the warning buzzer.
Oil pump:	Is driven by the engine rotation and feeds the hydraulic oil to the hydro boost through the piping.
Reservoir:	The pump stores the hydraulic oil for doing suction and expulsion.
Cooler pipe:	Located before the radiator, facilitates heat radiation of the hydraulic oil in the system piping, and inhibits an increase in the temperature of the oil.

Other units relating to this system include, as shown in the figure, the power steering, the pump and reservoir for the power steering, the master cylinder, which receives the output of the hydro boost and activates the brake, the reservoir for the master cylinder, and the brake pedal that activates the booster.

The master cylinder is integrally bolted to the booster of the hydro boost. The pump for the power steering is integrated as a tandem pump that shares the hydro boost pump and the drive unit. But as systems, the hydro boost and the power steering are independent of each other, and their reservoirs are separate as well.

Booster assembly

The hydraulic booster is a device that applies force to the master cylinder when the brake pedal is applied. The fluid flowing through the booster head is controlled by brake pedal movement.

The hydraulic booster cylinder rod attaches to a piston that connects with the spool valve, This assembly moves when brake pedal pressure is applied. The spool valve restricts fluid flow and builds pressure on one side of the piston. The pressure overcomes the return spring and moves the piston to a balanced position. As the piston moves, it pushes the cylinder rod and applies pressure to the master cylinder.

A relief valve inside the pump limits the pressure to 11,770 kPa (1670 psi). This pressure level provides good braking without damaging the brake pipes or hoses. When actuated, the relief valve allows fluid to bypass the piston.

Fluid and fluid handling

This system uses no special fluids. However, care must be taken to use the correct fluids. The master cylinder and brake system uses brake fluid, while the hydraulic brake booster pump uses power steering fluid.

Substandard or contaminated fluid

NOTICE: Hydraulic brake systems use two distinct and incompatible fluids. Power steering fluid is used in the hydraulic booster brake system. Brake fluid is used in the master cylinder and brake pipes to the wheels. Be extremely careful when selecting brake system fluids or seal damage can result. Refer to SECTION 0B to select the correct fluid.

NOTICE: Do not reuse brake system fluids. Do not mix power steering fluid with brake fluid. Swelling and deterioration of rubber parts can result from fluid contamination. The can lead to reduced brake performance and the eventual loss of braking capability.

Contaminated fluid causes swelling and deterioration of rubber parts that can lead to reduced brake performance and the eventual loss of braking capability. Check the condition of the fluid at regular intervals and note any unusual consistency, color, and sings of contaminants in the fluid. Do not reuse brake system fluids. Always discard used fluids. Do not mix power steering fluid with hydraulic brake fluid. If contamination occurs, flush the hydraulic booster system with clean power steering fluid.

Booster components bench servicing should be done in a clean work area separated from the brake servicing area. Wash hands before changing between brake or booster work areas. Do not use the same containers for fluids.

Flushing the hydraulic booster system

Flushing is required when dirt, sludge, or water is found in the system. Flushing involves running clean fluid through the system until the draining fluid appears the same as clean fluid.

Contaminated fluid in the booster system can cause rubber parts to deteriorate.

The hydraulic booster system should be cleaned and flushed when the hydraulic pump is replaced. Metal shavings from a worn hydraulic pump often contaminate the system. Pipes and hoses should be removed and blown clean of all metal shavings.

Hydraulic Brake System (NQR with Hydromaster)

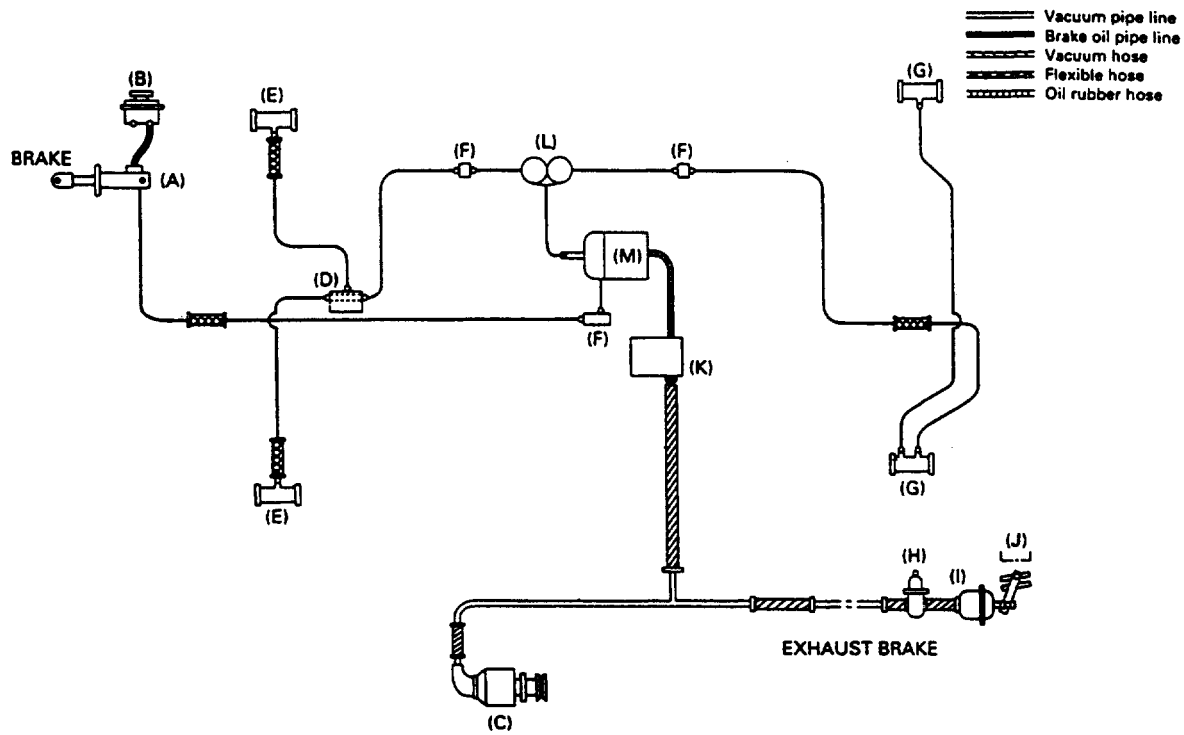

(A) Master cylinder (B) Oil tank (C) Vacuum pump (D) 3-way connector
(E) Front wheel cylinder (F) 2-way connector (G) Rear wheel cylinder
(H) Magnetic valve (I) Power chamber (J) Exhaust valve (K) Vacuum tank
(L) Safety valve (M) Hydromaster

This brake system uses a single hydraulic circuit with a hydromaster and safety valve.
The brake master cylinder and wheel cylinders are connected by steel pipe and flexible hoses through the hydromaster and safety valve.
To provide the maximum vacuum assist, the hydromaster is connected to the vacuum pump through the vacuum tank.

Front Drum Brake

Drum Inside Diameter
279.4 & 300 mm – 2L Type

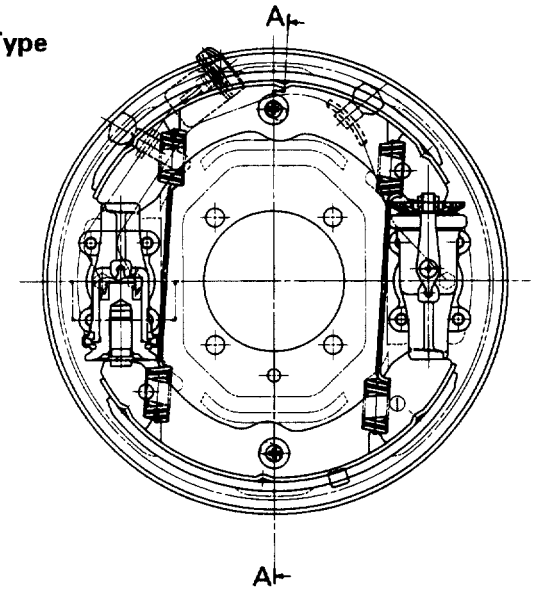

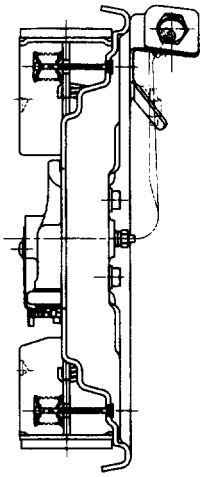

Section A-A

Drum Inside Diameter
320 mm – 2L Type

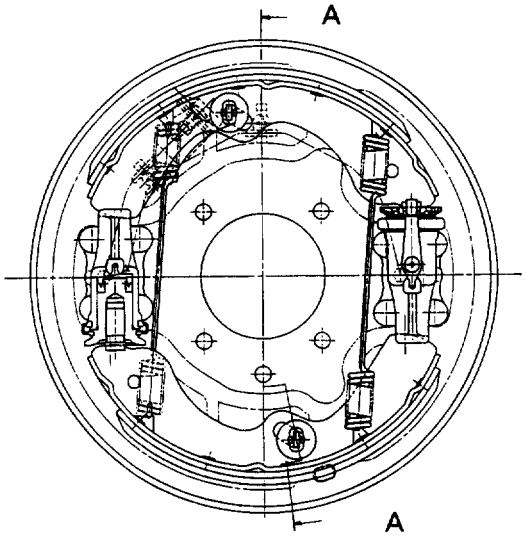

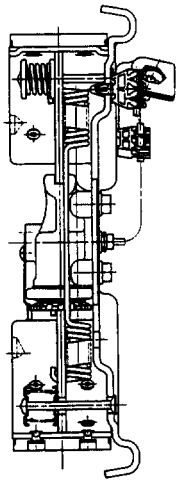

Section A-A

Drum Inside Diameter
300 mm – D2L Type

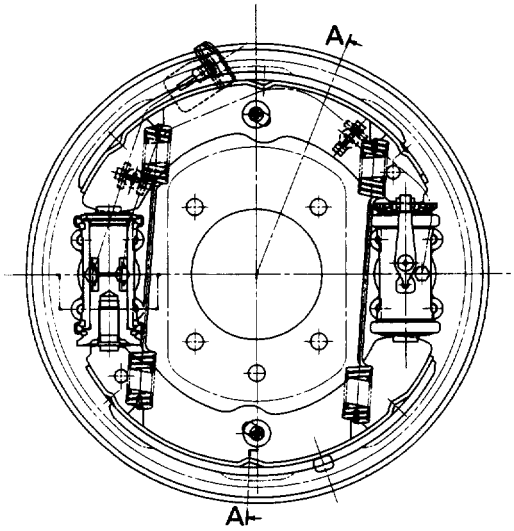

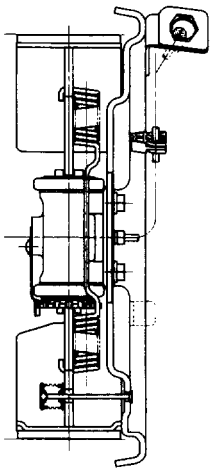

Section A-A

Front Drum Brake

Drum Inside Diameter
320mm – D2L Type

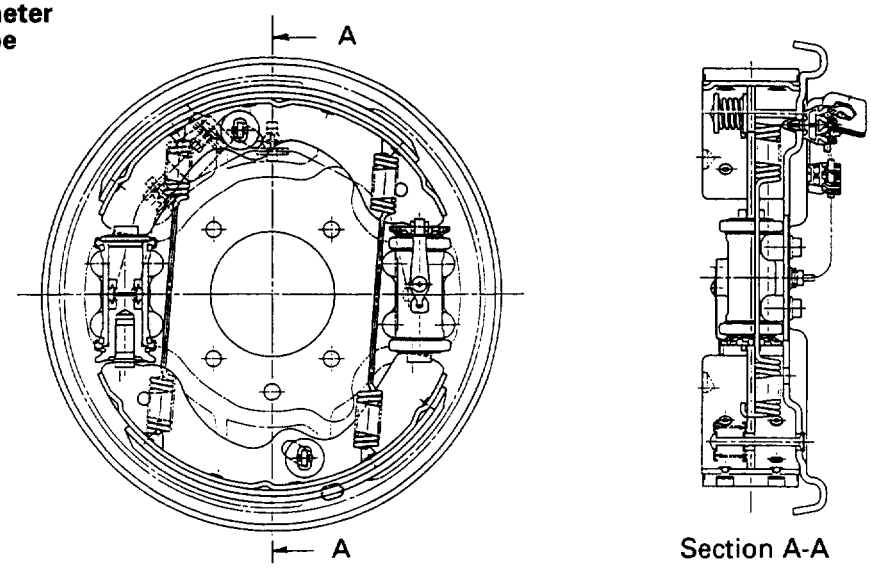

NPS66

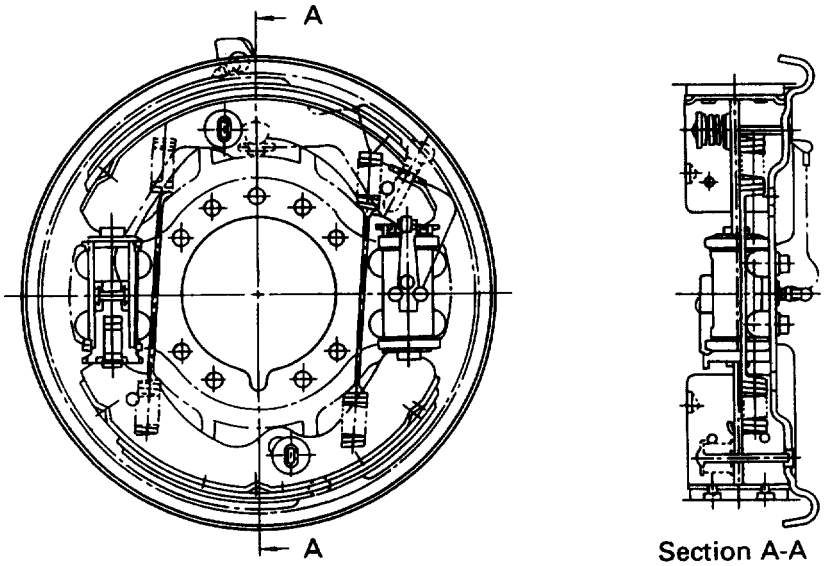

Rear Drum Brake (Manual Adjuster Type)

Drum Inside Diameter
228.6 mm – D2L Type

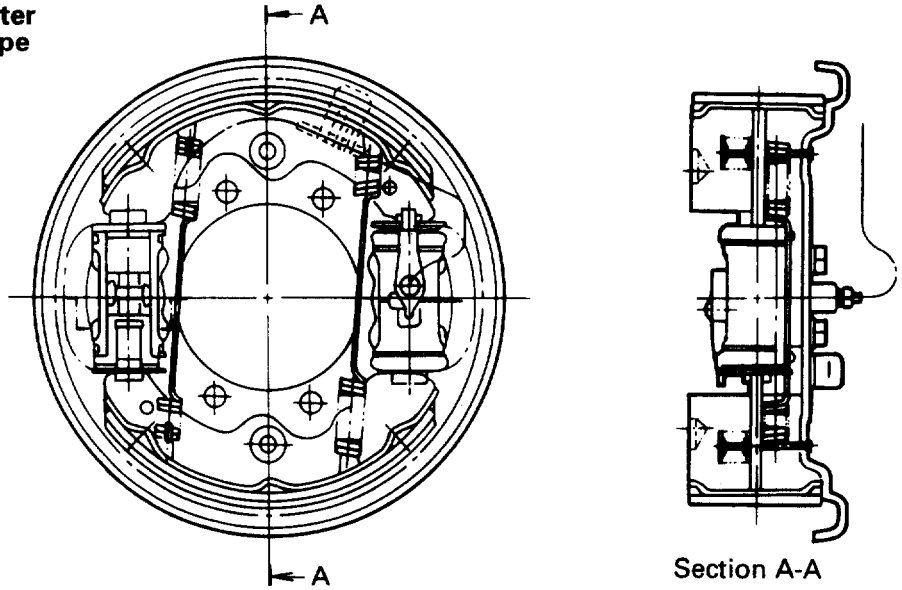

Drum Inside Diameter
279.4 mm – D2L Type

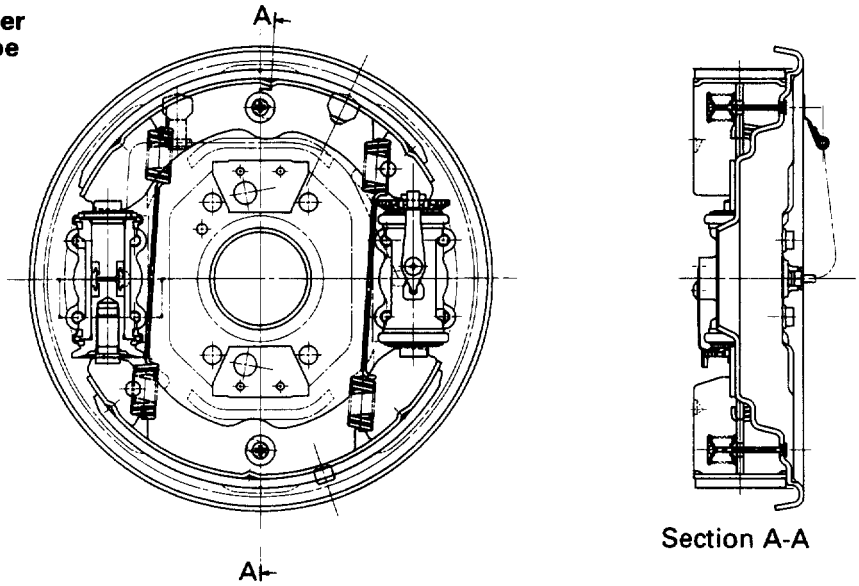

Drum Inside Diameter
300 mm – D2L Type

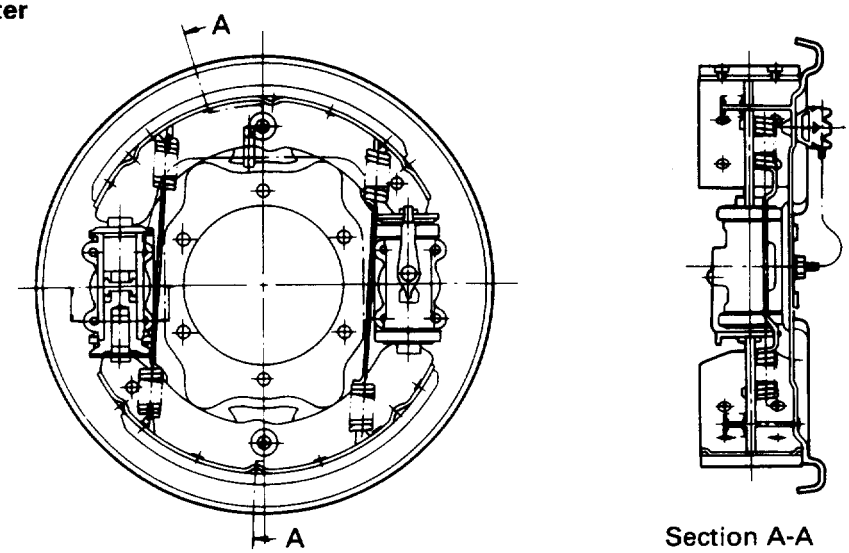

Rear Drum Brake (Manual Adjuster Type)

Drum Inside Diameter
320 mm – D2L Type

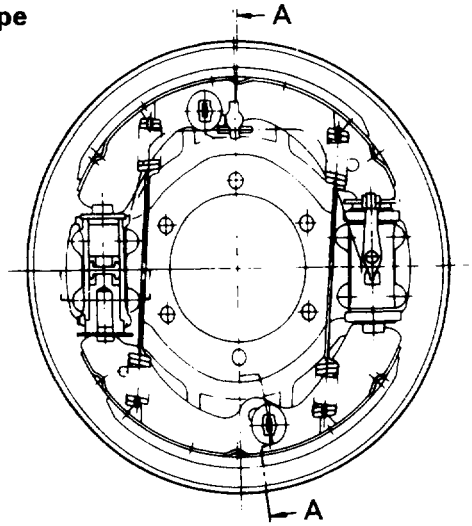

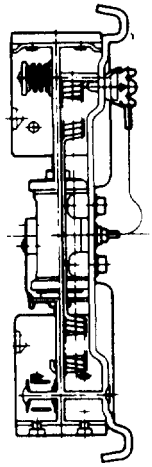

Section A-A

Rear Drum Brake (Auto-adjuster Type)

Drum Inside Diameter
228.6 mm – D2L Type

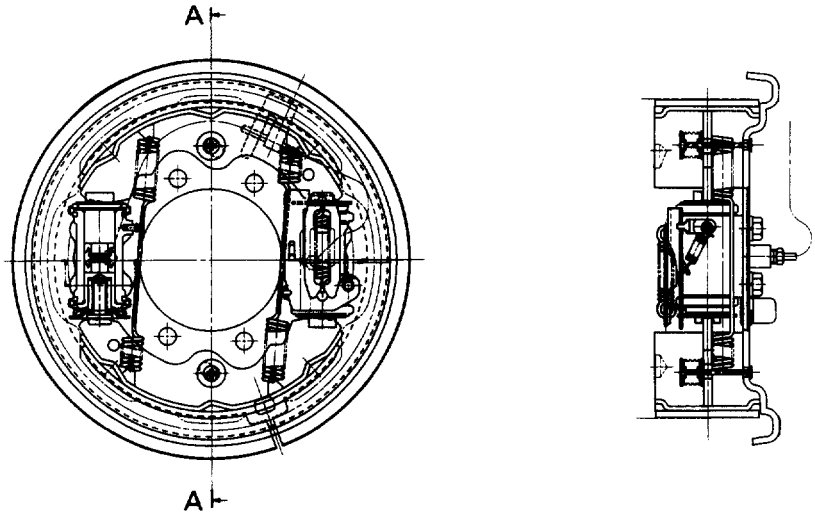

Section A-A

Drum Inside Diameter
279.6 mm – D2L Type

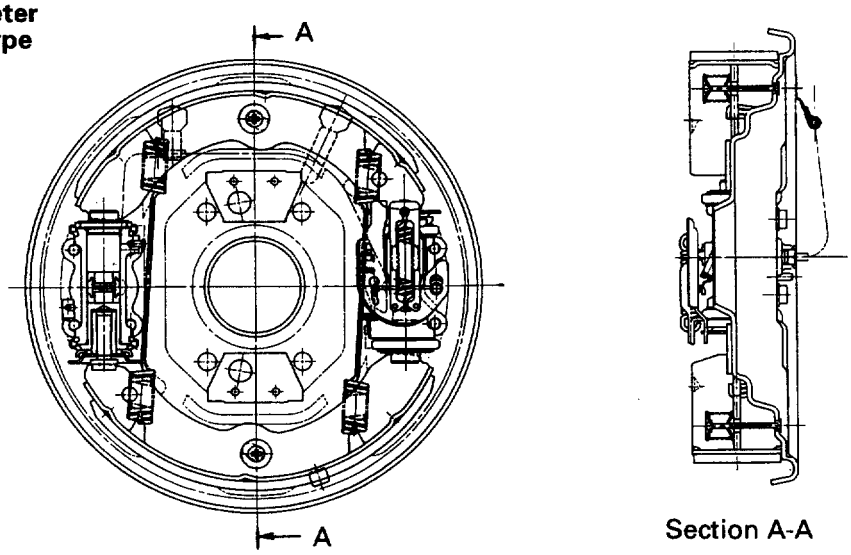

Section A-A

Drum Inside Diameter
300 mm – D2L Type

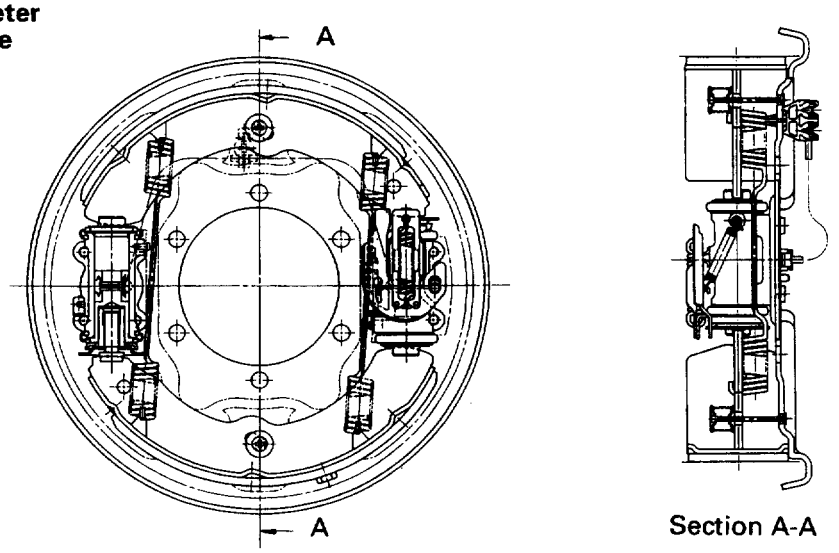

Section A-A

Rear Drum Brake (Auto-adjuster Type)

Drum Inside Diameter
320 mm – D2L Type

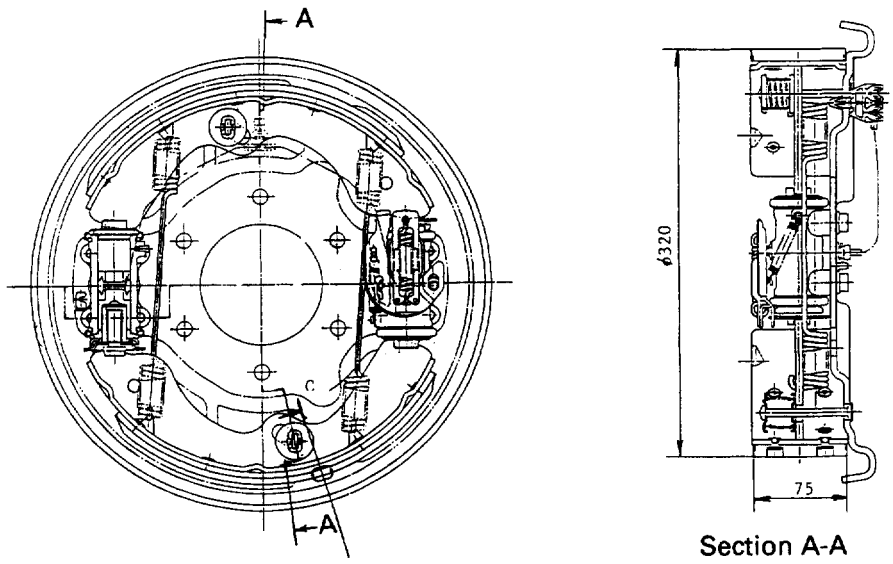

Section A-A

The dual two leading shoe type brake eliminates the problem of weaker braking force on reverse stops common to two leading shoe type brakes while maintaining the many advantages of this type of brake.

This combination of two leading shoes provides nearly equal braking force. This prevents an uneven load distribution on the wheel hub bearings.

This type of brake is widely used on the rear wheels of many vehicles.

Auto-Adjuster

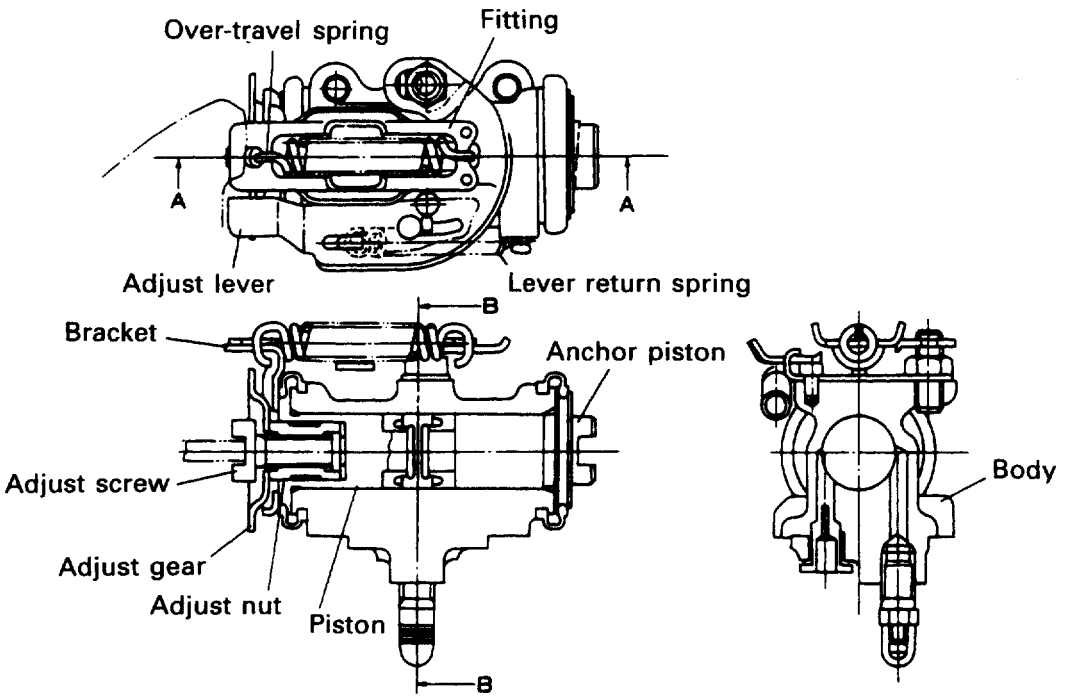

Cross section A-A

Cross section B-B

Operation of Auto-adjuster

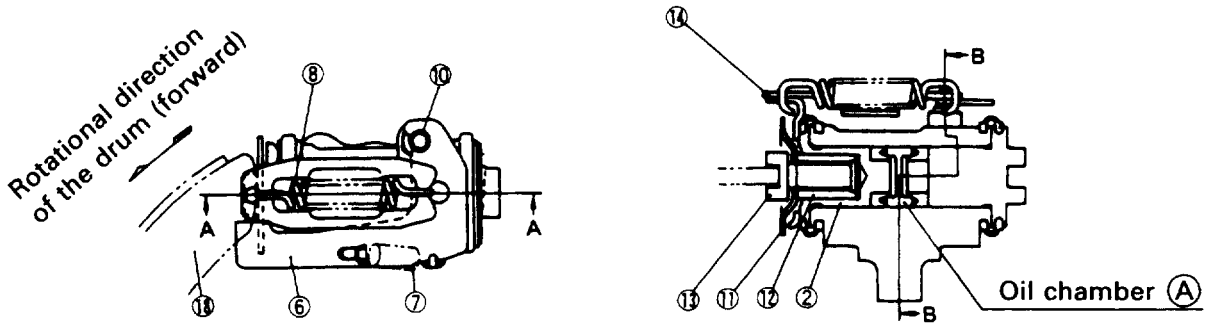

Cross section A-A

The entire auto-adjust mechanism is incorporated into the wheel assembly, and the adjust operation is carried out only when in the forward movement. The operation of the auto-adjuster is as follows:

- When fluid pressure is applied to the oil chamber Ⓐ, the piston, which is resistant to the over-travel spring installed between the bracket ⑭ and the adjust lever ⑥, is forced out to the brake shoe ⑱ side. (The piston and bracket are welded into a monolithic construction.)
- When force delivered by the over-travel spring ⑱ is intensified as the piston ② moves, the balance maintained with the lever return spring ⑦ installed between the adjust lever ⑥ and lever pin ⑩ is destroyed, and the adjust lever ⑥ with the lever pin ⑩ as a pivot, rotates the adjust gear ⑪ in the rotational direction.

- When the shoe clearance (clearance between the brake shoe and the brake drum) gets to the specified value, the adjust lever ⑥ adjusts the shoe clearance by driving one gear tooth or more of the adjust gear ⑪ in the rotational direction through the force of the over-travel spring ⑧.
- When the brake shoe ⑱ comes into contact with the brake drum, the frictional force generated between the adjust screw ⑬ and the adjust nut ⑫ gets larger, and the adjust gear ⑪ cannot be rotated by the force of the over-travel spring ⑧. (The adjust gear and the adjust nut are welded into a monolithic construction.) That is, the automatic adjustment of the shoe clearance is carried out until the brake shoe comes in touch with brake drum. However, over adjust can be avoided since this automatic adjustment will not be performed for the increased amount of the piston shift caused by the deformation of the drum and shoe after their contact.
- When the fluid pressure is released from the oil chamber Ⓐ, the force by which the lever return spring ⑦ rotates the adjust gear ⑥ adversely gets weaker than the frictional force generated between the adjust screw ⑬ and the adjust nut ⑫, therefore, the adjust lever ⑥ slides on the adjust gear ⑪ to get back to its former state before operation and this operation is completed with the adjust gear ⑪ left in the state in the rotational direction into which it has been driven.

Front Disc Brake

Independent Suspension Models

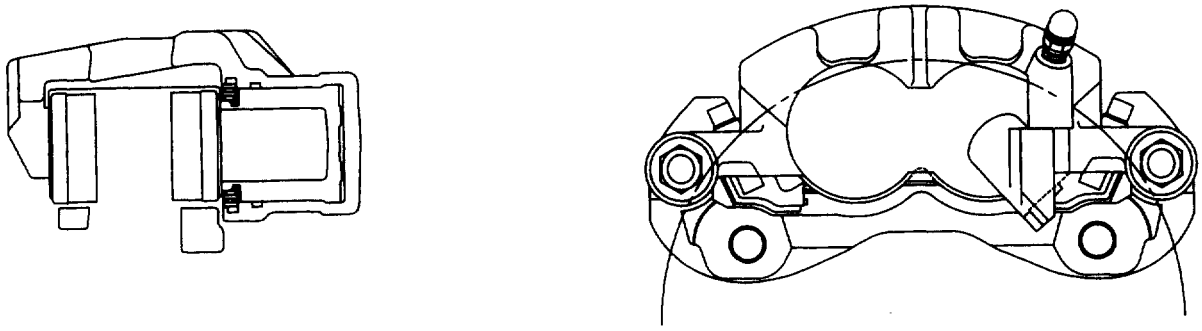

Leaf Spring Suspension Models (Rigid Axle Type)

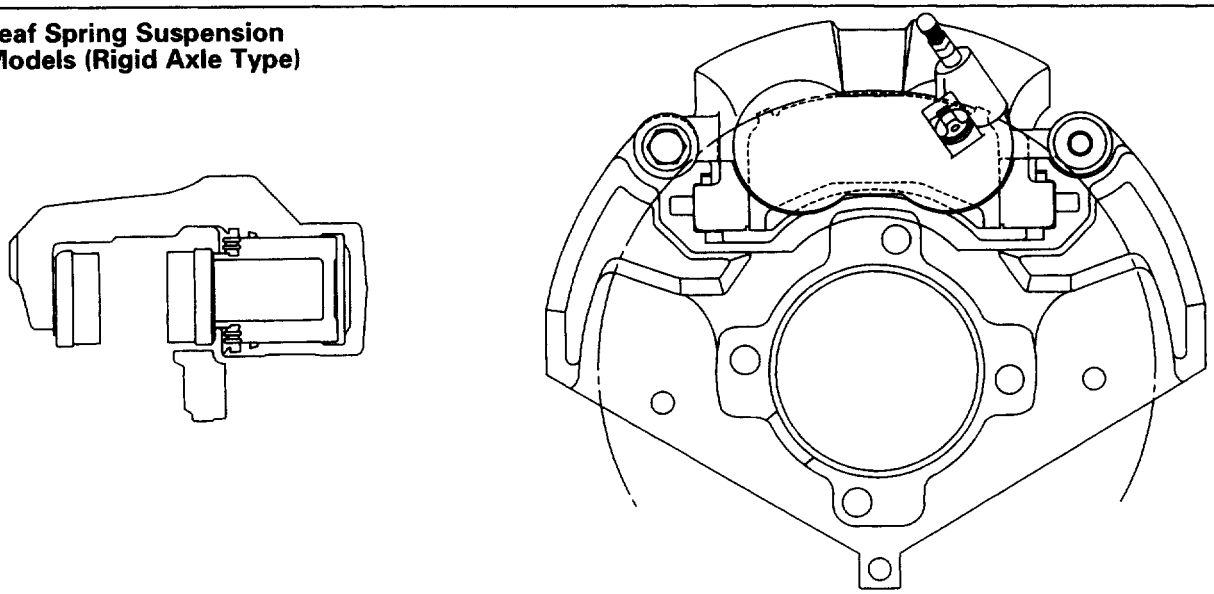

The disc brake assembly consists of a caliper, piston, disc, pad assembly and support bracket. The caliper assembly has two bores and is mounted to the support bracket with 2 mounting bolts. The support bracket allows the caliper to move laterally against the disc. The caliper is a one-piece casting with the inboard side containing the piston bore. A square cut rubber seal is located in a groove in the piston bore which provides the hydraulic seal between the piston and the cylinder wall.

Load Sensing Proportioning Valve (LSPV)

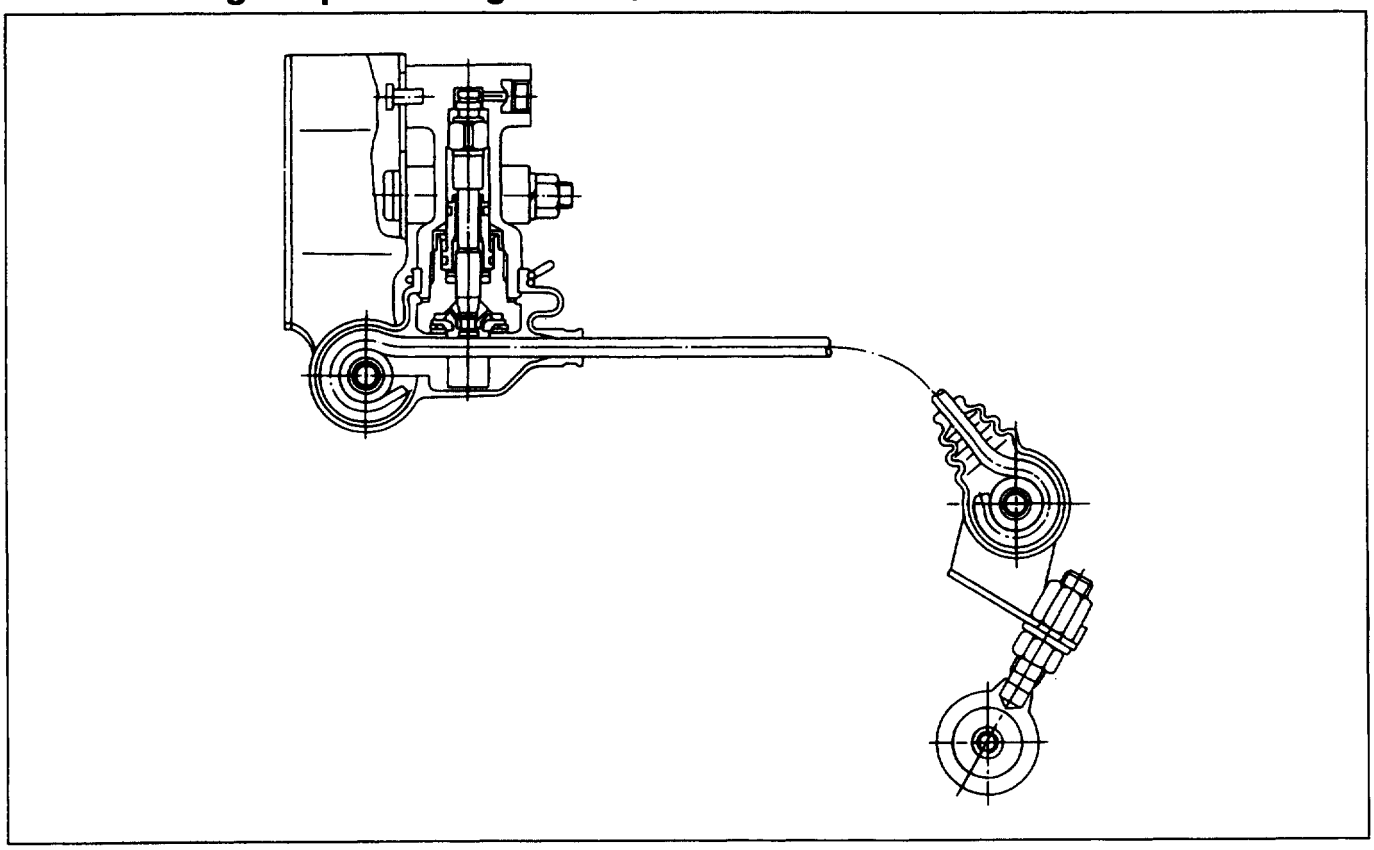

Decerelation Sensing Proportioning Valve (DSPV)

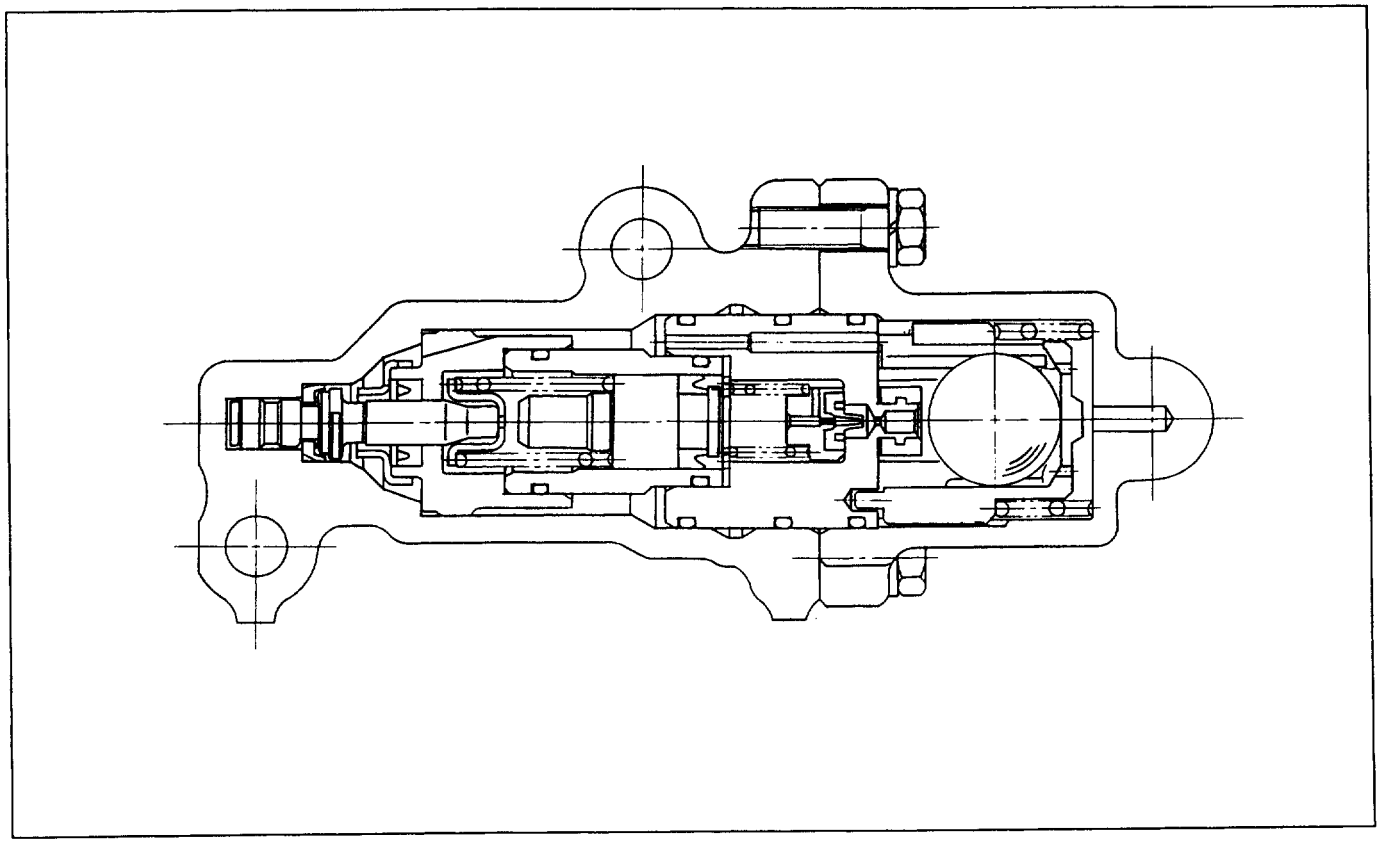

Hydromaster

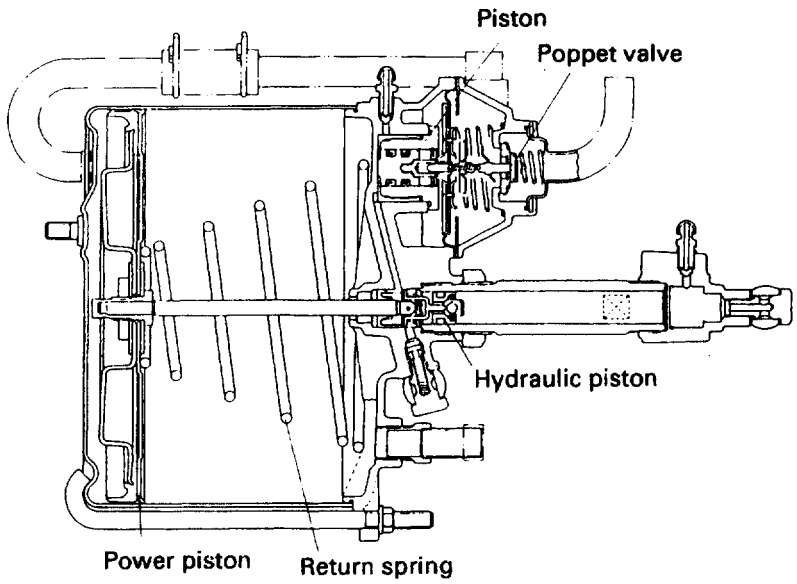

The hydromaster consists of cylinder shell, power piston, return spring, valve body assembly, and hydraulic piston.
The hydromaster is a vacuum servo unit designed to multiply hydraulic braking force on the vehicle.
It is similar to a Master-Vac in that it utilizes the difference between the atmospheric pressure and a negative pressure to provide a servo action.
The braking force of a conventional hydraulic system is directly proportional to the foot pressure applied to the brake pedal.
Hydromaster equipped hydraulic systems multiply the hydraulic pressure applied to the wheel cylinders when the brake pedal is depressed. This ensures braking power at all times and greatly relieves vehicle operator fatigue.
should the hydromaster fail, normal hydraulic brake function will not be affected. The brake system will function without the servo action.
Earlier hydromaster designs used negative pressure produced by the throttle valve and delivered through the ejector.
More recent designs use negative pressure produced by the vacuum pump for greater reliability.

Safety Valve

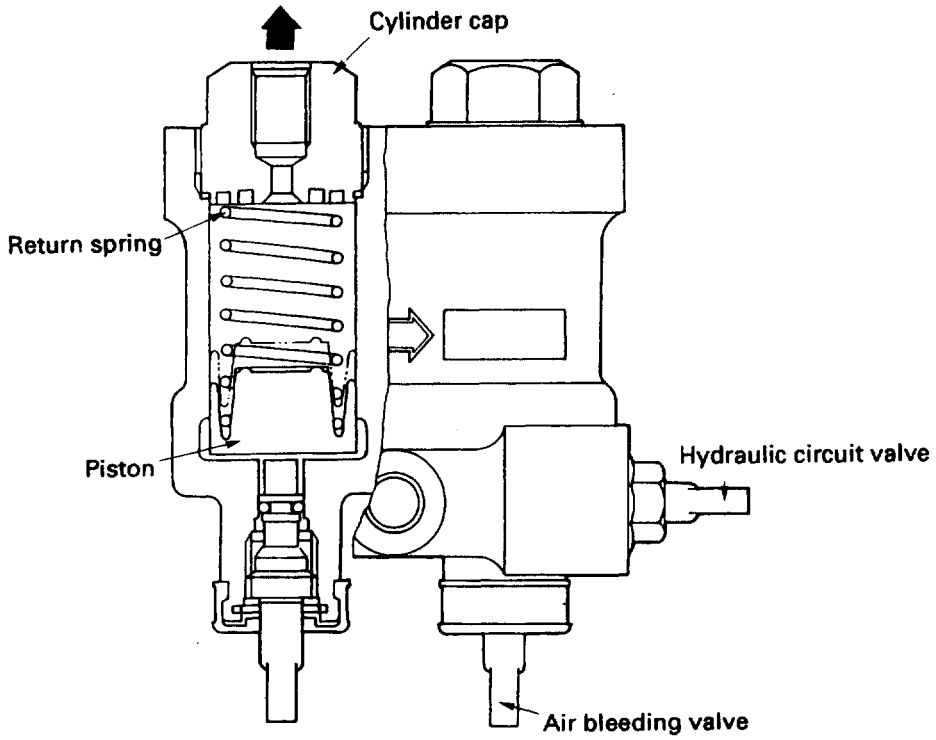

The brake safety valve consists of cylinder body, piston, return spring, cylinder cup, hydraulic circuit valve and air bleeding valve.
The brake safety valve maintains brake function in the event of hydraulic circuit failure.
There are a pair of safety valves (one for the front brake hydraulic circuit and the other for the rear brake hydraulic circuit) in the pipe line behind the brake hydromaster. Pumping the brake pedal will cause the hydraulic circuits to exert braking force should hydraulic system failure occurs because of the following reasons:

* Damaged brake pipe or brake hose.
* Worn or damaged wheel cylinder and/or piston cups

If one of the hydraulic systems fail, the safety valve on the failed side will close to maintain hydraulic pressure. Sufficient braking force will remain to bring the vehicle to a safety stop.
After stopping the vehicle, close the safety valve shut-off valve on the failed hydraulic circuit.

ON-VEHICLE SERVICE

FRONT DISC BRAKE ASSEMBLY

LEAF SPRING SUSPENSION MODELS (ϕ282mm)

REMOVAL

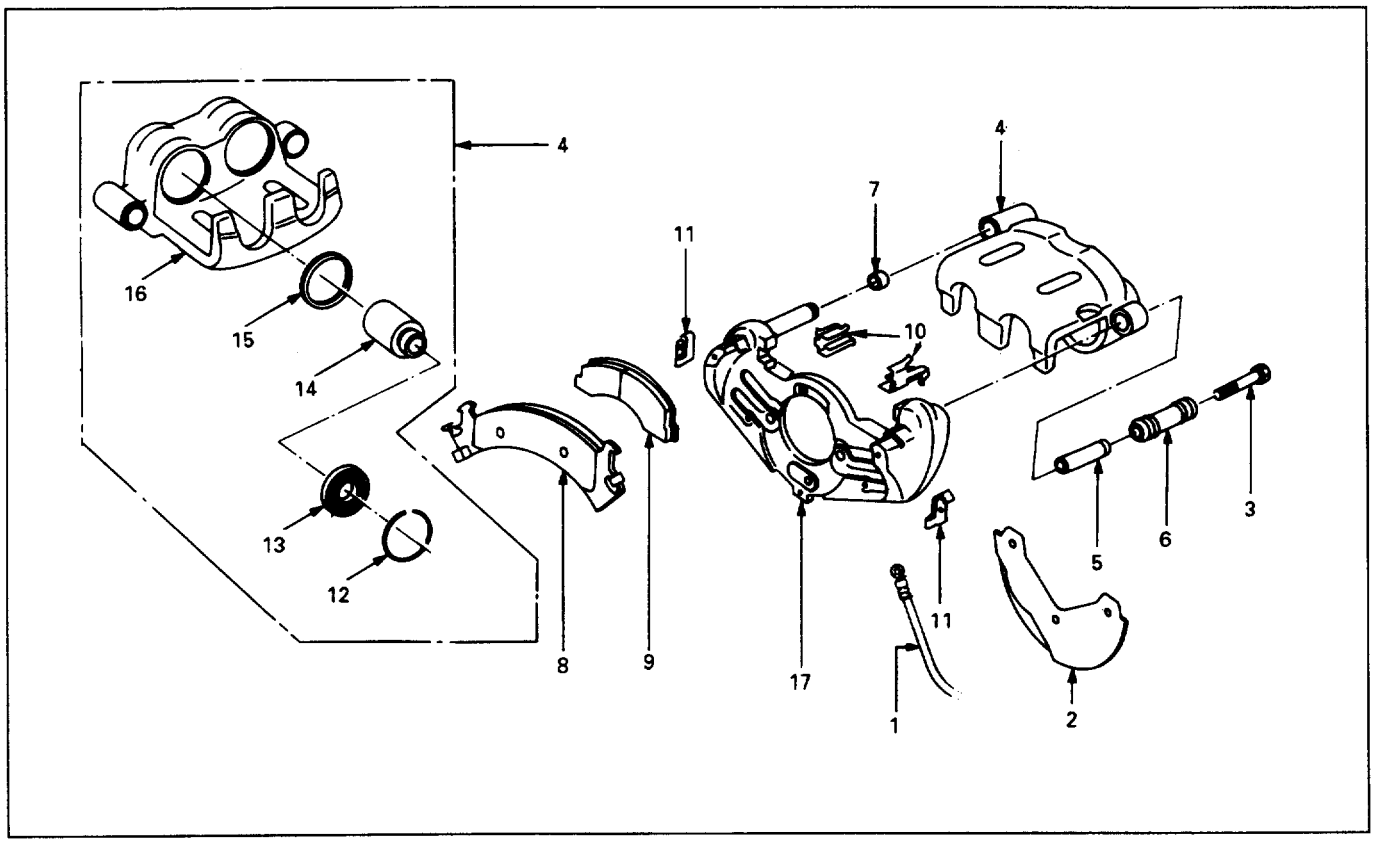

Removal Steps

1. Flexible hose
2. Dust shield
3. Lock pin bolt
4. Caliper assembly
5. Sleeve
6. Sleeve boot
7. Lock Pin boot
8. Outer pad
9. Inner pad
10. Inner pad clip
11. Outer pad clip
12. Boot ring
13. Piston boot
14. Piston
15. Piston seal
16. Body assembly
17. Support assembly

Removal Steps

1. **Flexible Hose**
2. **Dust Shield**
3. **Lock Pin Bolt**
4. **Caliper Assembly**

   Slide the caliper assembly free from the inside

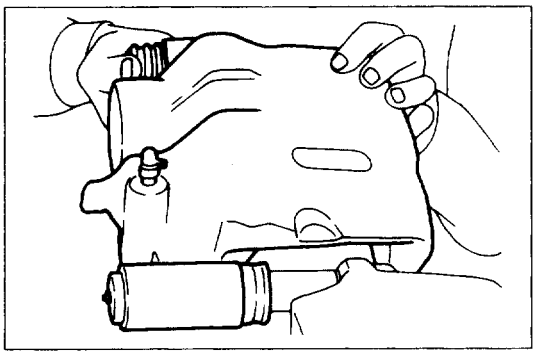

5. **Sleeve**
6. **Sleeve Boot**
7. **Lock Pin Boot**
8. **Outer Pad**
9. **Inner Pad**
10. **Inner Pad clip**
11. **Outer Pad clip**
12. **Boot Ring**
13. **Piston Boot**
14. **Piston**
    1. Place a piece of wood across the body assembly to prevent piston damage.
    2. Apply approximately 196 kPa (2.0 kg/cm^2, 28.4 psi) of compressed air to the body assembly oil port to remove the pistons.

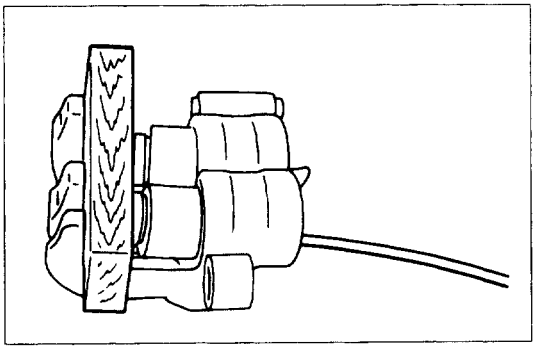

15. **Piston Seal**
16. **Body Assembly**
17. **Support Assembly**
    1. Remove the hub and disc before removing the support assembly.

       Refer to "Hub and Disc."

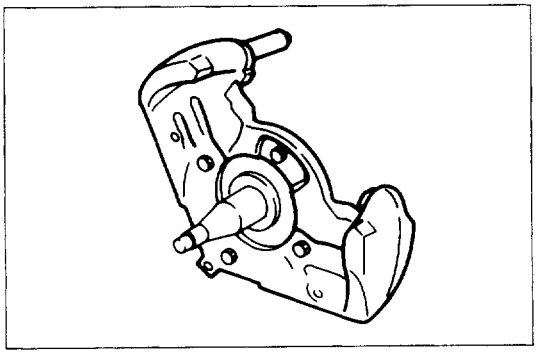

INSPECTION AND REPAIR

Make the necessary adjustments, repairs, and part replacements if excessive wear or damage is discovered during inspection.

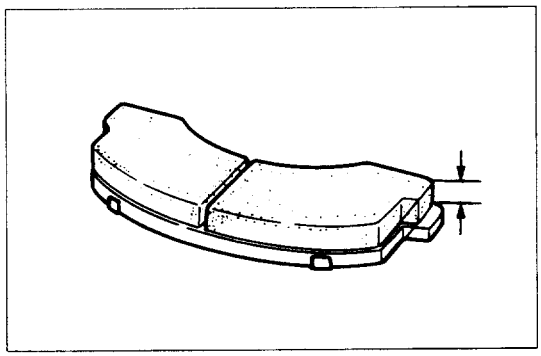

Inner and Outer Pad

Use a vernier caliper to measure the inner pad and outer pad thickness.

Pad Thickness mm(in)

Standard	Limit
14 (0.551)	1 (0.039)

If the measured value is less than the specified limit, the pads must be replaced with the repair pad kit.

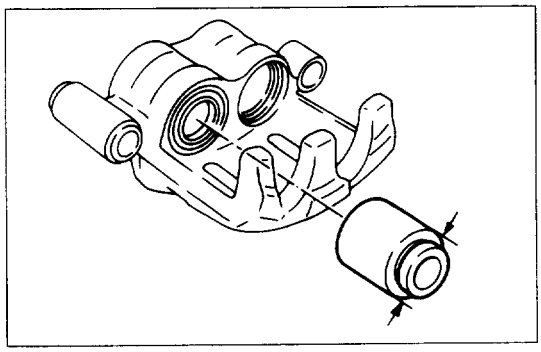

Piston and Cylinder Clearance

1. Use a micrometer to measure the piston diameter.
2. Use an inside dial indicator to measure the cylinder bore.
3. Calculate the piston and cylinder clearance.

Piston and Cylinder Clearance mm(in)

Standard	Limit
0.08 – 0.18 (0.0031 – 0.0071)	0.23 (0.0091)

If the clearance exceeds the specified limit, the piston and/or the body assembly must be replaced along with the repair seal kit.

Disc

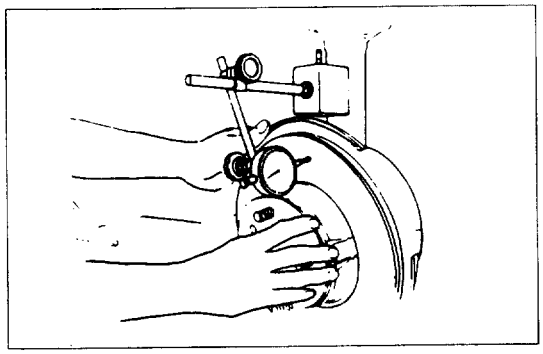

Lateral Runout

1. Adjust the wheel bearing correctly.
   Refer to "Front Axle" in Section 4.
2. Attach a dial indicator to some portion of the suspension so that the stem contacts the disc face about 29 mm (1.14 in) from the disc edge.
3. Move the disc one complete rotation.
   The lateral runout should not exceed 0.13 mm (0.005 in)

Maximum runout mm (in)	0.13 (0.005)

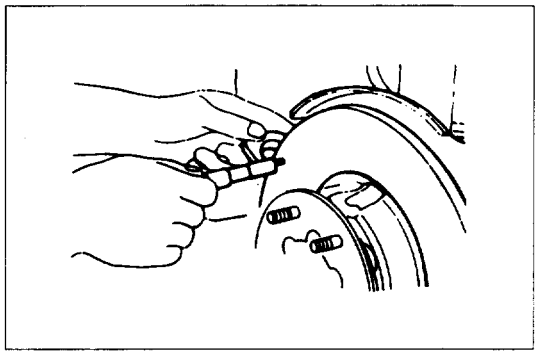

Parallelism and thickness

Parallelism is the measurement of the thickness of the disc at four or more points around the circumference of the disc. All measurement must be made at 29 mm (1.14 in) from the edge of the disc.

The disc thickness must not vary more than 0.010 mm (0.0004 in) from point to point.

Maximum parallelism	mm (in)	0.02 (0.0008)

Disc Thickness mm (in)

Standard	Limit
35.0 (1.378)	32.0 (1.260)

INSTALLATION

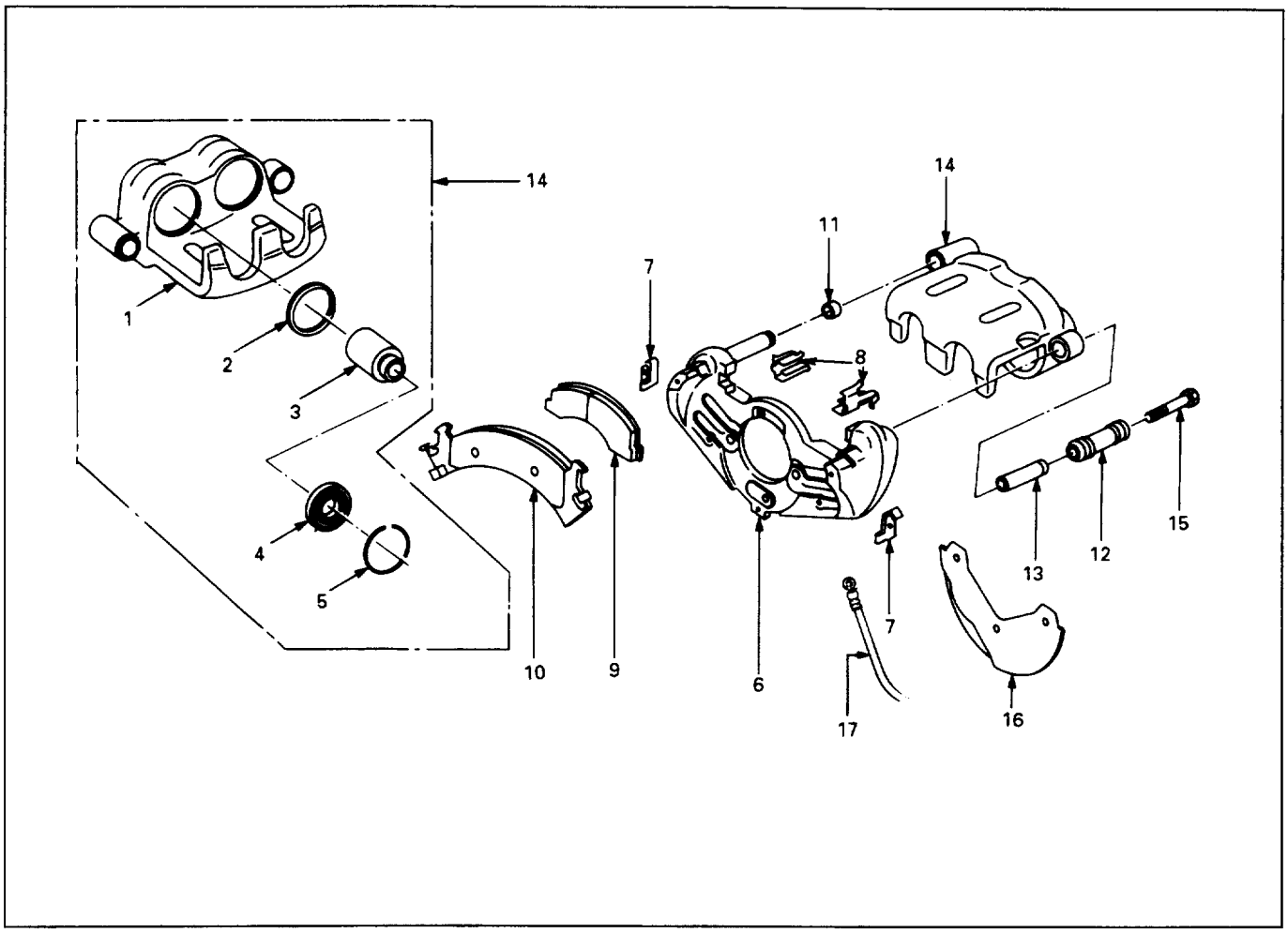

Installation Steps

1. Body assembly
2. Piston seal
3. Piston
4. Piston boot
5. Boot ring
6. Support assembly
7. Outer pad clip
8. Inner pad clip
9. Inner pad
10. Outer pad
11. Lock pin boot
12. Sleeve boot
13. Sleeve
14. Caliper assembly
15. Lock pin bolt
16. Dust shield
17. Flexible hose

Installation steps

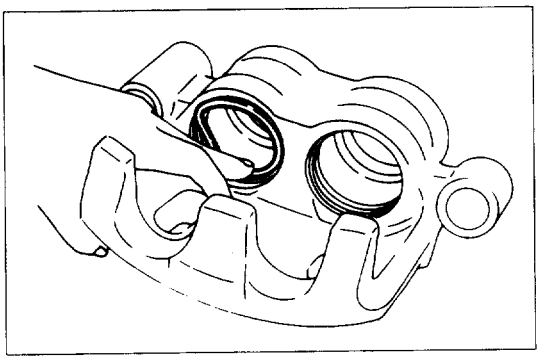

1. **Body Assembly**
2. **Piston Seal**
   1. Apply rubber grease to the piston seal.
      The rubber grease is included in the seal kit.
   2. Install the piston seal to the cylinder bore groove.

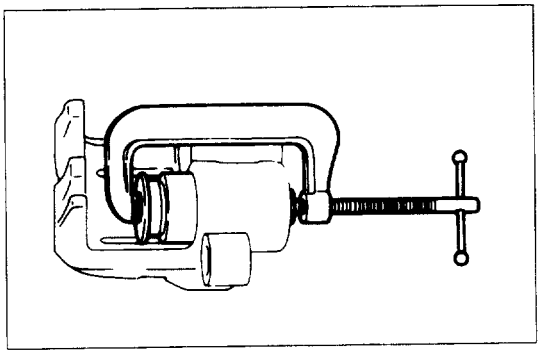

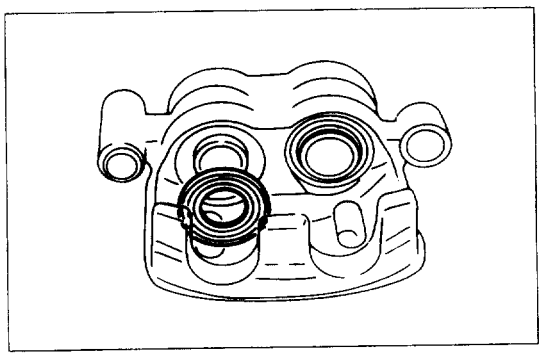

3. **Piston**
4. **Piston Boot**
5. **Boot Ring**
   1. Apply brake oil to the piston outer circumference.
   2. Use a hand vise to install the pistons to the cylinder.
   3. Apply special grease to the piston.
      This will prevent cylinder and piston corrosion.
   4. Install the piston boot outer lip to the cylinder bore groove.
      Install the piston boot inner lip to the piston groove.
      Handle the piston boot carefully.
   5. Install the boot ring to the cylinder bore groove.
      The boot ring must be completely installed to the groove.

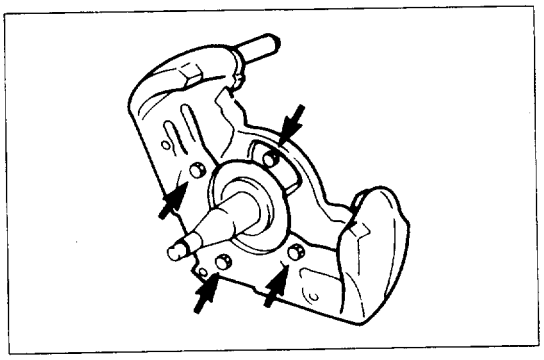

6. **Support Assembly**
   1. Install the support assembly to the knuckle.
   2. Tighten the fixing nuts to the specified torque.

Fixing Nut Torque	N·m (kg·m/lb·ft)
	157 (16.0 / 116)

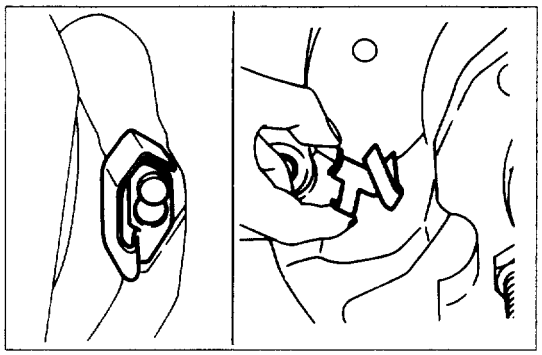

7. **Outer Pad Clip**
8. **Inner Pad Clip**

   Be sure that the clips are completely installed to the support assembly.

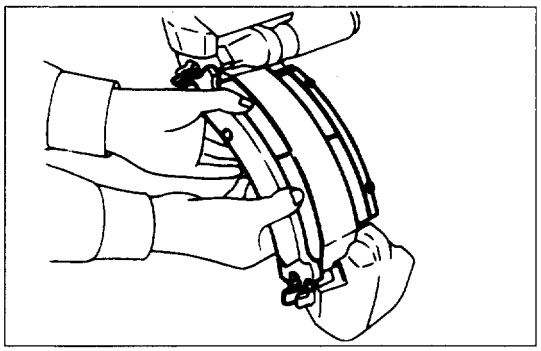

9. **Inner Pad**
10. **Outer Pad**

    Install the inner pad and the outer pad to the support assembly.

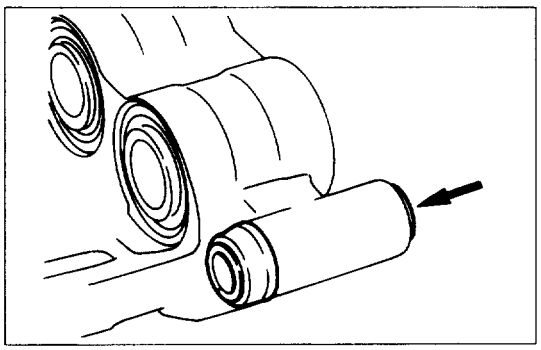

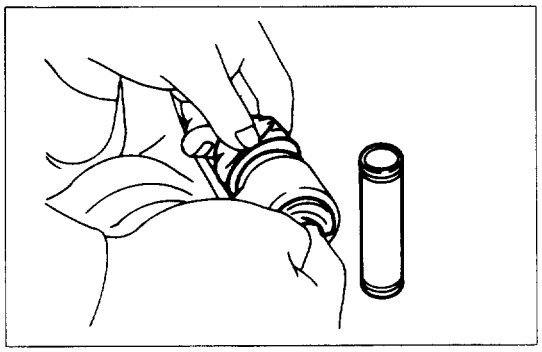

11. **Lock Pin Boot**
    1) Apply approximately 1 g (0.035 oz) of special grease to the pin boot bore.

       This will prevent pin corrosion.

       The special grease is included in the seal kit.
    2) Install the pin boot lip to the support assembly.

       The other pin boot lip will be installed to the caliper assembly groove after installation of the caliper assembly.

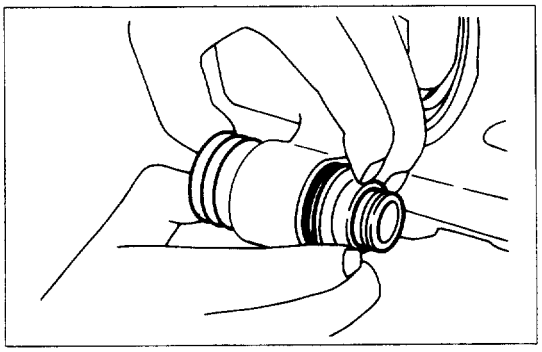

12. **Sleeve Boot**
13. **Sleeve**
    1) Apply approximately 1 g (0.035 oz) of special grease to the sleeve boot bore.

       This will prevent sleeve corrosion.

       The special grease is included in the seal kit.
    2) Install the sleeve boot to the caliper assembly.
    3) Install the sleeve to the sleeve boot.
    4) Install the sleeve boot lips to the sleeve grooves.

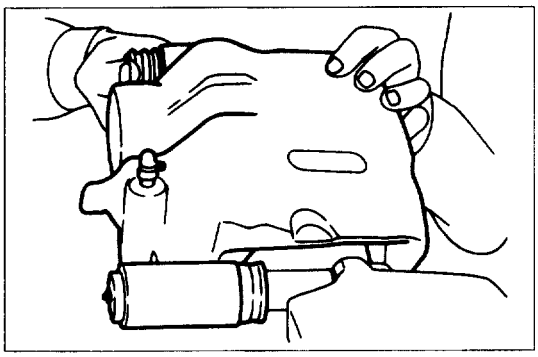

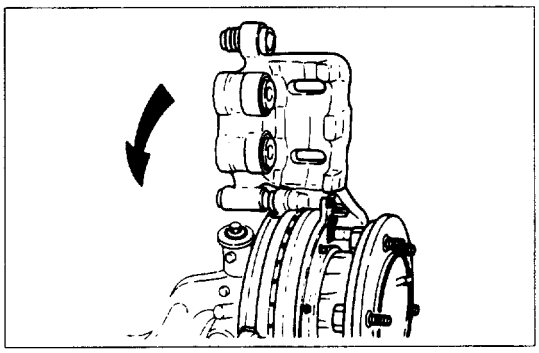

14. Caliper Assembly

15. Lock Pin Bolt

1. Install the caliper assembly to the support assembly guide pin from the inside.
2. Install the pin boot lip to the guide pin groove.
3. Return the caliper assembly to its original position. Take care not to pinch the sleeve boot.
4. Tighten the lock pin bolt to the specified torque.

Lock Pin Bolt Torque	N·m (kg·m/lb·ft)
92 (9.4 / 68)	

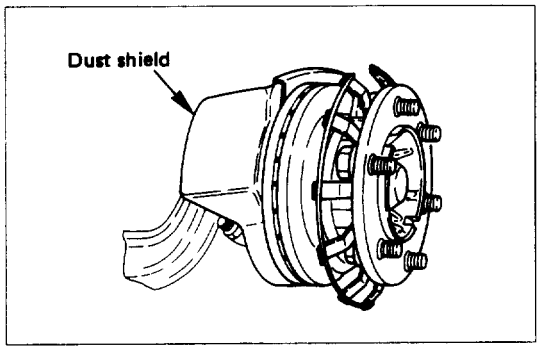

16. Dust Shield

Tighten the dust shield fixing bolts to the specified torque.

Dust Shield Fixing Bolt Torque	N·m (kg·m/lb·ft)
37 (3.8 / 27)	

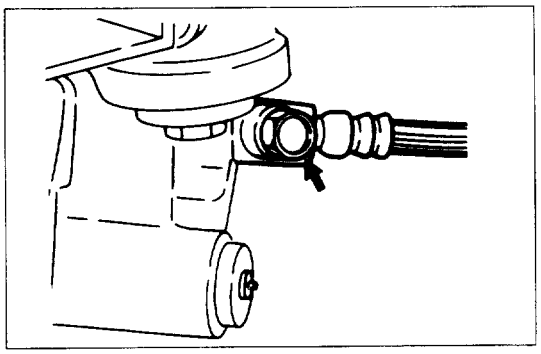

17. Flexible Hose

Tighten the flexible hose bolt to the specified torque.

Flexible Hose Bolt Torque	N·m (kg·m/lb·ft)
34 (3.5 / 25)	

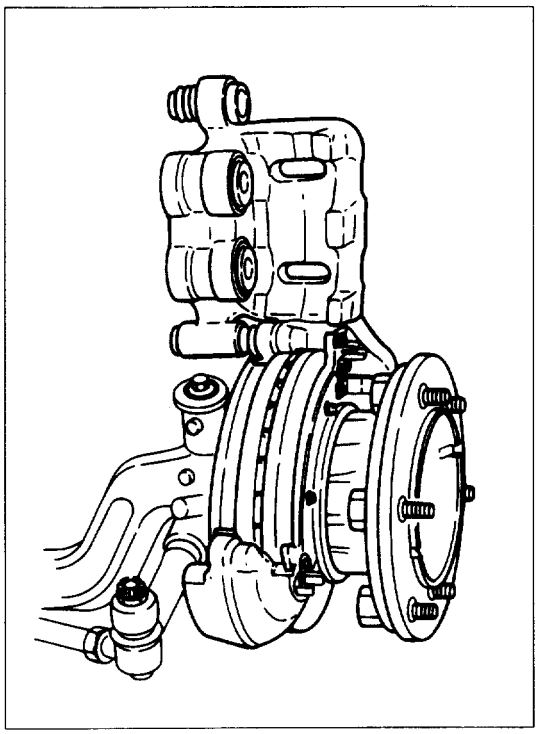

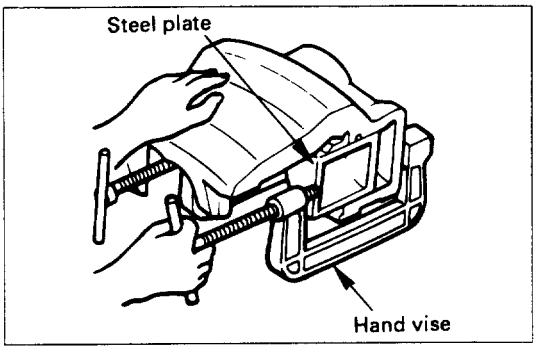

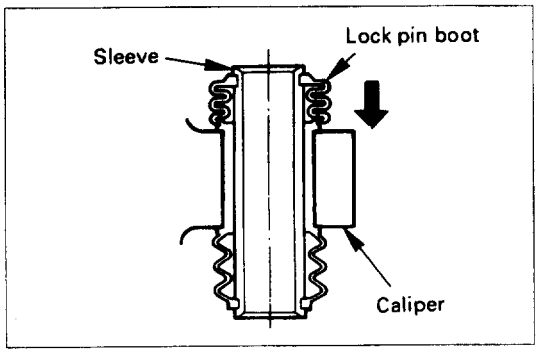

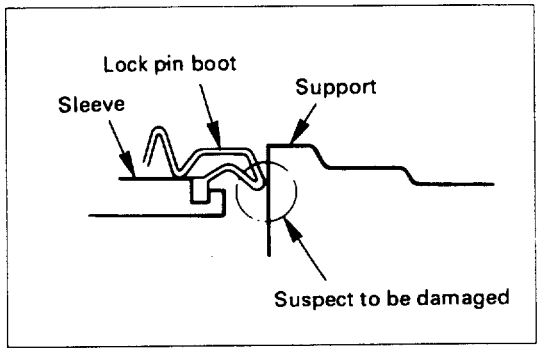

Front Disc Brake Pad Replacement

Use the following procedure to replace the front disc brake pads.

1. Loosen and remove the lock pin bolt from the lower side of the caliper.
2. Turn the caliper assembly up and wire it to the frame firmly so that the hose is not stretched.

NOTE:

Do not disconnect the brake hose.

3. Remove the pad assembly with clips and install the new pads along with new clips.

NOTE:

Be careful not to assemble the inner and outer pad reversely.

Keep the rotor face away from the brake oil or grease.

4. Use a hand vise to push the piston backward until it reaches the cylinder bottom, as the piston was pushed forward by the distance where the pad worn.

NOTE:

When using a hand vise, push the piston at its center.

5. Before returning the caliper assembly to its original position, adjust the sleeve position to keep some clearance between support plate and sleeve end, so that the lock pin boot may not be wedged.

NOTE:

Do not allow the foreign matters to get in the sleeve.

6. Install the lock pin into the support plate by turning the caliper carefully so that the piston boot and lock pin boot may not be wedged.

NOTE:

After assembling the caliper assembly, make sure that the piston boot and lock pin boot fitted correctly, and not damaged.

7. Tighten the lock pin bolt to the specified torque.

Lock Pin Bolt Torque	N·m (kg·m/lb·ft)
	92(9.4 / 68)

LEAF SPRING SUSPENSION MODELS (ϕ293 & ϕ310mm)

REMOVAL

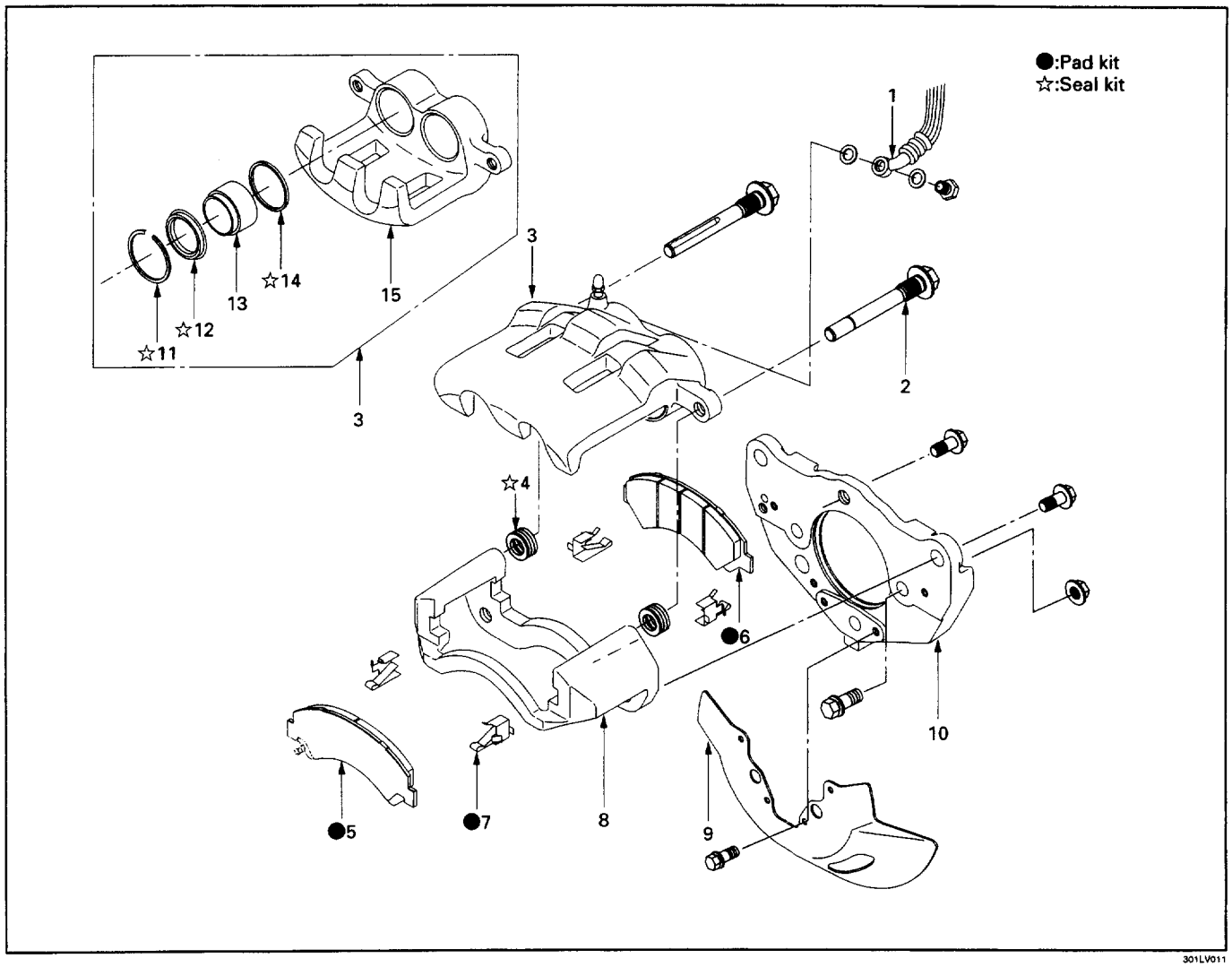

301LV011

Removal Steps

1. Flexible hose
2. Lock pin bolt
3. Caliper assembly
4. Pin boot
5. Outer pad
6. Inner pad
7. Pad clip
8. Support assembly
9. Wind guide
10. Adapter
11. Boot ring
12. Piston boot
13. Pisotn
14. Piston seal
15. Body assembly

Removal Steps

1. **Flexible Hose**
2. **Lock Pin Bolt**
3. **Caliper Assembly**

   Slide the caliper assembly free from the inside

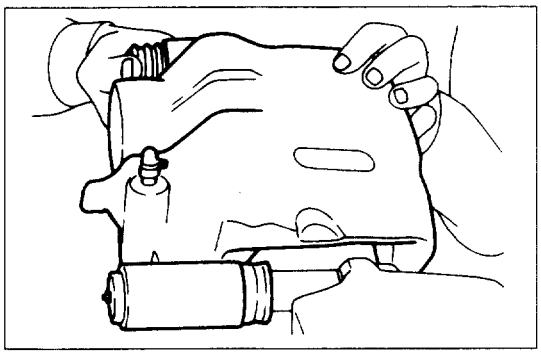

4. **Pin Boot**
5. **Outer Pad**
6. **Inner Pad**
7. **Pad Clip**
8. **Support Assembly**
9. **Wind Guide**
   - Remove the hub and disc before removing the support assembly.

     Refer to "Hub and Disc."
10. **Adapter**
11. **Boot Ring**
12. **Piston Boot**
13. **Piston**
    1. Place a piece of wood across the body assembly to prevent piston damage.
    2. Apply approximately 196 kPa (2.0 kg/cm^2, 28.4 psi) of compressed air to the body assembly oil port to remove the pistons.

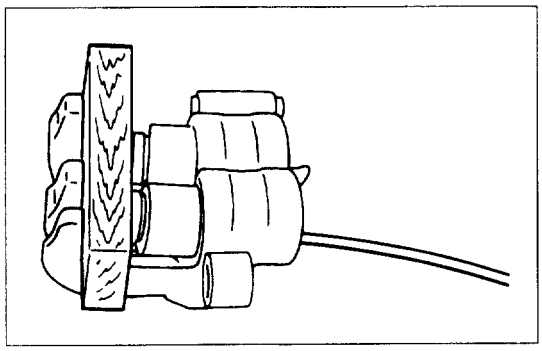

14. **Piston Seal**
15. **Body Assembly**

INSPECTION AND REPAIR

Make the necessary adjustments, repairs, and part replacements if excessive wear or damage is discovered during inspection.

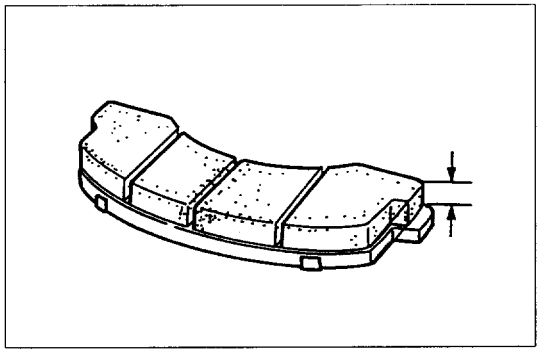

Inner and Outer Pad

Use a vernier caliper to measure the inner pad and outer pad thickness.

Pad Thickness mm(in)

Standard	Limit
13 (0.51)	1 (0.039)

If the measured value is less than the specified limit, the pads must be replaced with the repair pad kit.

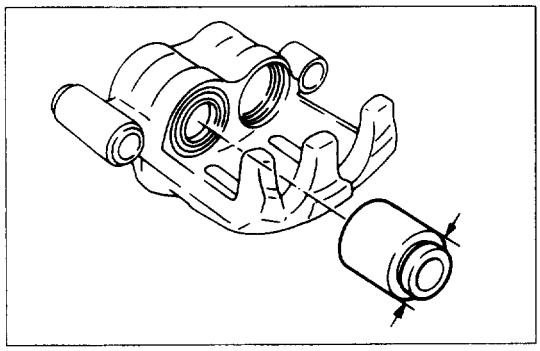

Piston and Cylinder Clearance

1. Use a micrometer to measure the piston diameter.
2. Use an inside dial indicator to measure the cylinder bore.
3. Calculate the piston and cylinder clearance.

Piston and Cylinder Clearance mm(in)

Standard	Limit
0.08 – 0.18 (0.0031 – 0.0071)	0.23 (0.0091)

If the clearance exceeds the specified limit, the piston and/or the body assembly must be replaced along with the repair seal kit.

Disc

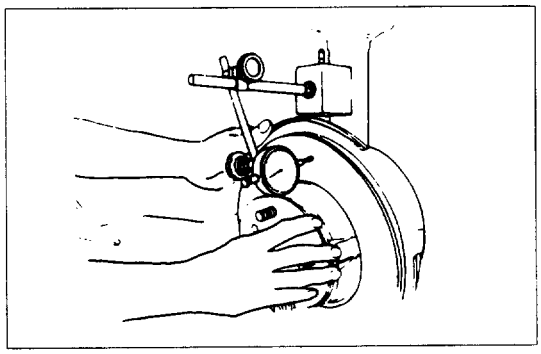

Lateral Runout

1. Adjust the wheel bearing correctly.
   Refer to "Front Axle" in Section 4.
2. Attach a dial indicator to some portion of the suspension so that the stem contacts the disc face about 29 mm (1.14 in) from the disc edge.
3. Move the disc one complete rotation.
   The lateral runout should not exceed 0.13 mm (0.005 in)

Maximum runout mm (in)	0.13 (0.005)

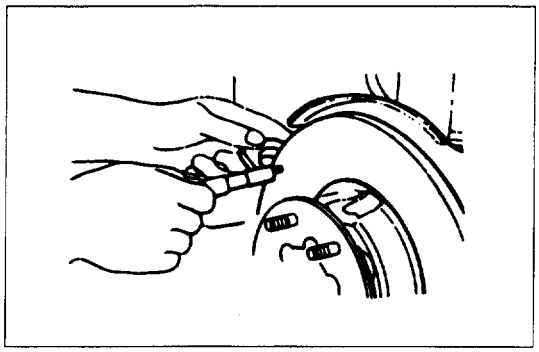

Parallelism and thickness

Parallelism is the measurement of the thickness of the disc at four or more points around the circumference of the disc. All measurement must be made at 29 mm (1.14 in) from the edge of the disc.

The disc thickness must not vary more than 0.010 mm (0.0004 in) from point to point.

Maximum parallelism mm (in)	0.02 (0.0008)

Disc Thickness mm (in)

	Standard	Limit
ϕ310mm	42.0 (1.654)	39.0 (1.535)
ϕ293mm	40.0 (1.575)	37.0 (1.457)

INSTALLATION

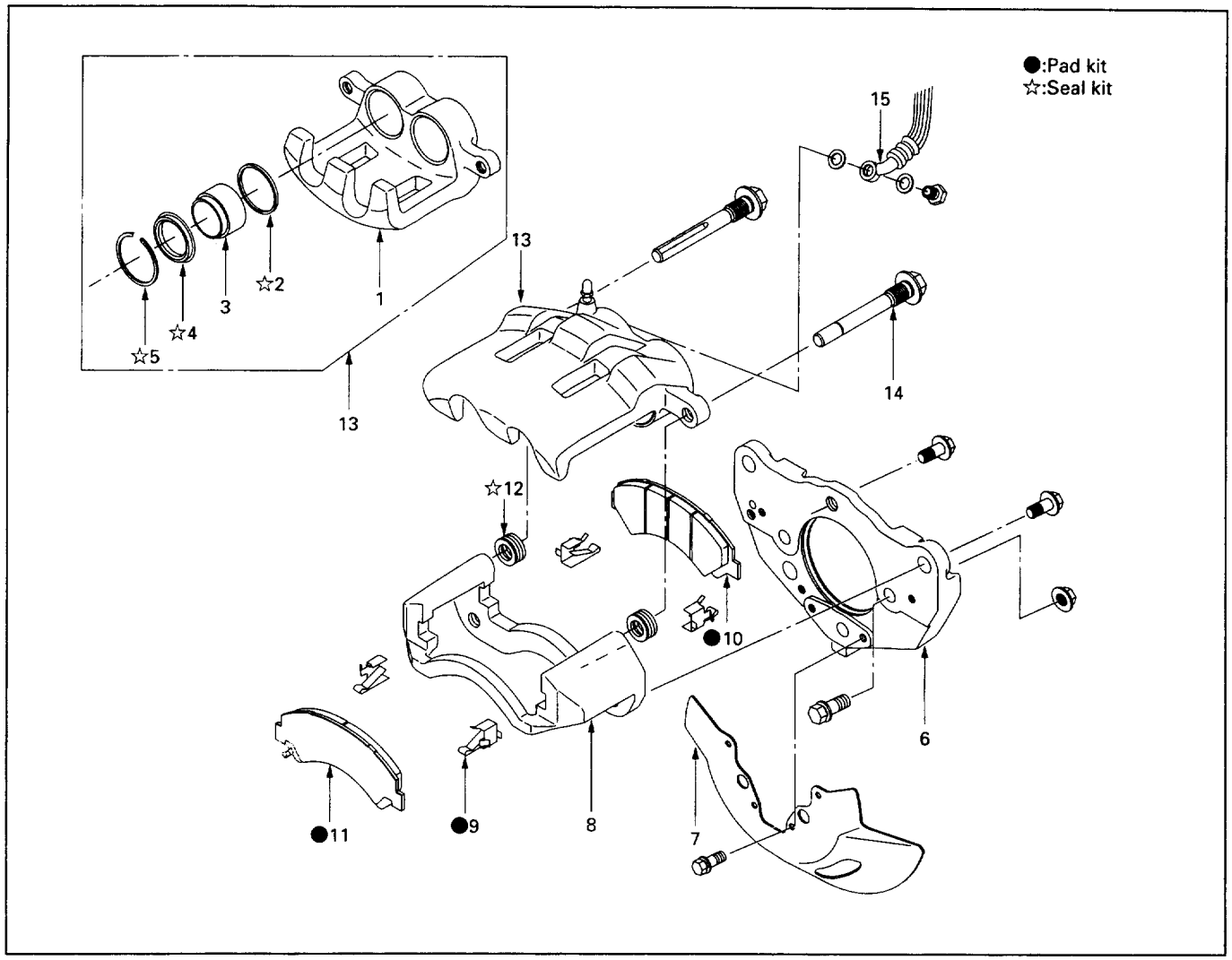

301LV012

Installation Steps

1. Body assembly
2. Piston seal
3. Piston
4. Piston boot
5. Boot ring
6. Adapter
7. Wind guide
8. Support assembly
9. Pad clip
10. Inner pad
11. Outer pad
12. Pin boot
13. Caliper assembly
14. Lock pin bolt
15. Flexible hose

Installation steps

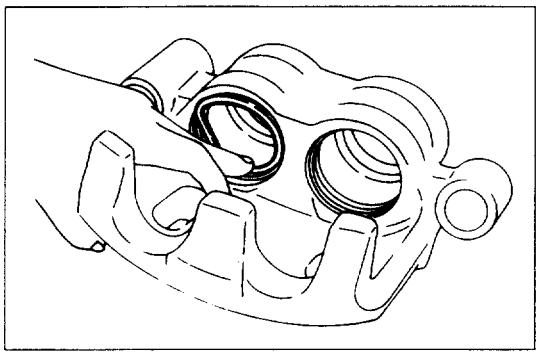

1. **Body Assembly**
2. **Piston Seal**
   1. Apply rubber grease to the piston seal.
      The rubber grease is included in the seal kit.
   2. Install the piston seal to the cylinder bore groove.

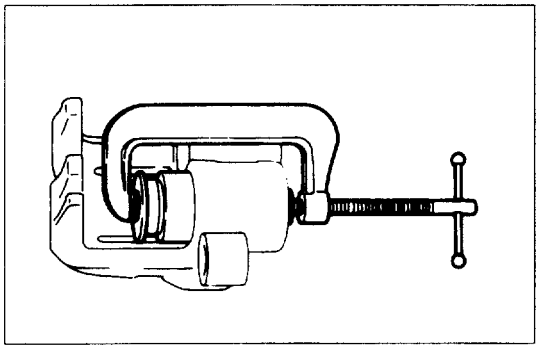

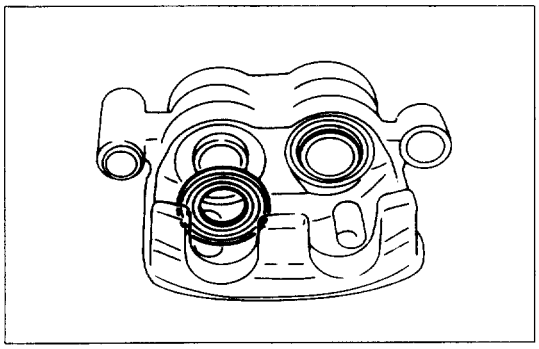

3. **Piston**
4. **Piston Boot**
5. **Boot Ring**
   1. Apply brake oil to the piston outer circumference.
   2. Use a hand vise to install the pistons to the cylinder.
   3. Apply special grease to the piston.
      This will prevent cylinder and piston corrosion.
   4. Install the piston boot outer lip to the cylinder bore groove.
      Install the piston boot inner lip to the piston groove.
      Handle the piston boot carefully.
   5. Install the boot ring to the cylinder bore groove.
      The boot ring must be completely installed to the groove.

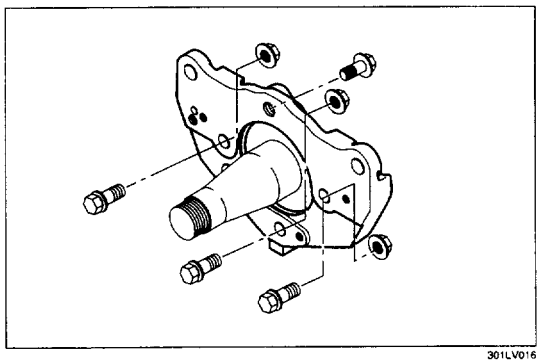

6. **Adapter**
   1. Install the adapter to the knuckle.
   2. Tighten the fixing bolts and nuts to the specified torque.

Fixing Nut Torque	N·m (kg·m/lb·ft)
	162 (16.5 / 119)

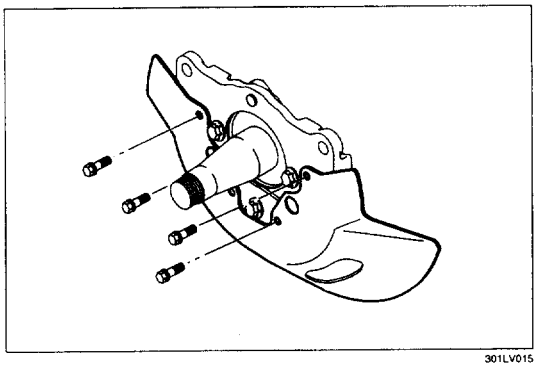
301LV015

7. Wind Guide

Tighten the wind guide fixing bolts to the specified torque.

Wind Guide Fixing Bolt Torque	N·m (kg·m/lb·in)
13 (1.3 / 113)	

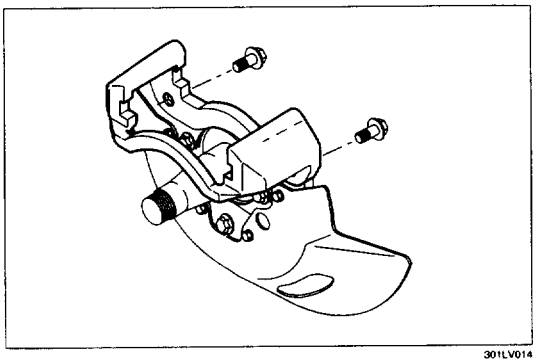
301LV014

8. Support Assembly

Tighten the support assembly fixing bolts to the specified torque.

Support Assembly Fixing Bolt Torque	N·m (kg·m/lb·ft)
221 (22.5 / 163)	

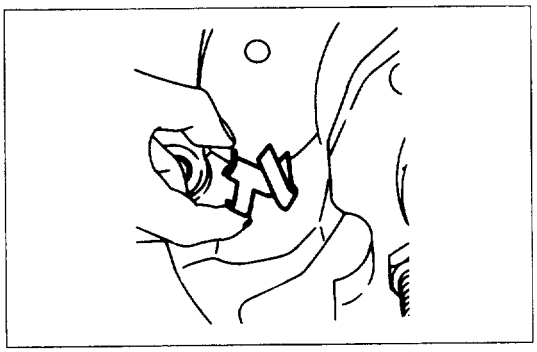

9. Pad Clip

Be sure that the clips are completely installed to the support assembly.

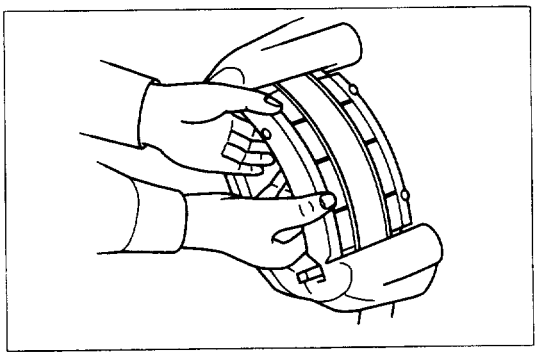

10. Inner Pad

11. Outer Pad

Install the inner pad and the outer pad to the support assembly.

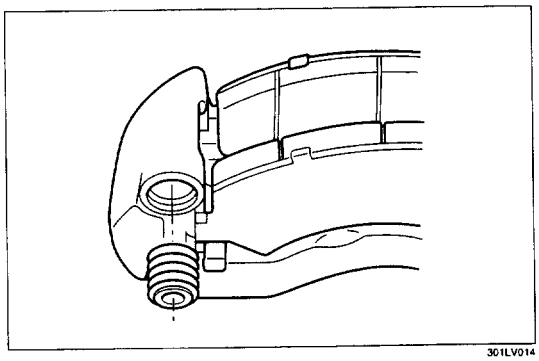
301LV014

12. Pin Boot

1) Apply approximately 1 g (0.035 oz) of special grease to the pin boot bore and pin boss bore of support.
   This will prevent pin corrosion.
   The special grease is included in the seal kit.
2) Install the pin boot to the support assembly.

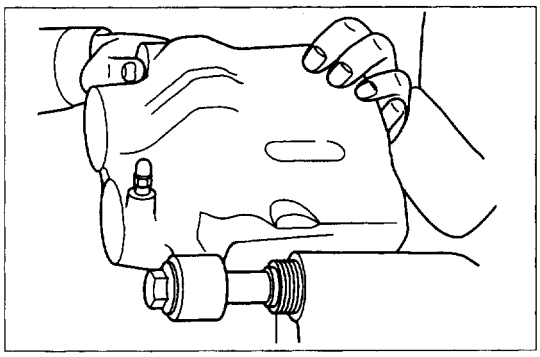

13. Caliper Assembly

14. Lock Pin Bolt

1. Install the caliper assembly to the support assembly guide pin from the inside.
2. Return the caliper assembly to its original position. Take care not to pinch the sleeve boot.
3. Tighten the lock pin bolt to the specified torque.

Lock Pin Bolt Torque	N·m (kg·m/lb·ft)
137 (14 / 101)	

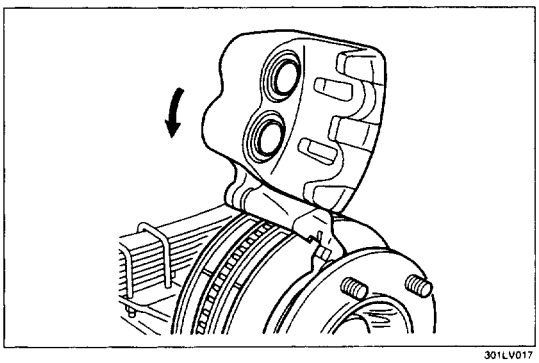

301LV017

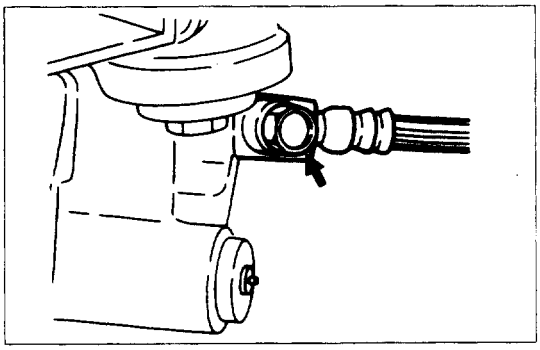

15. Flexible Hose

Tighten the flexible hose bolt to the specified torque.

Flexible Hose Bolt Torque	N·m (kg·m/lb·ft)
34 (3.5 / 25)	

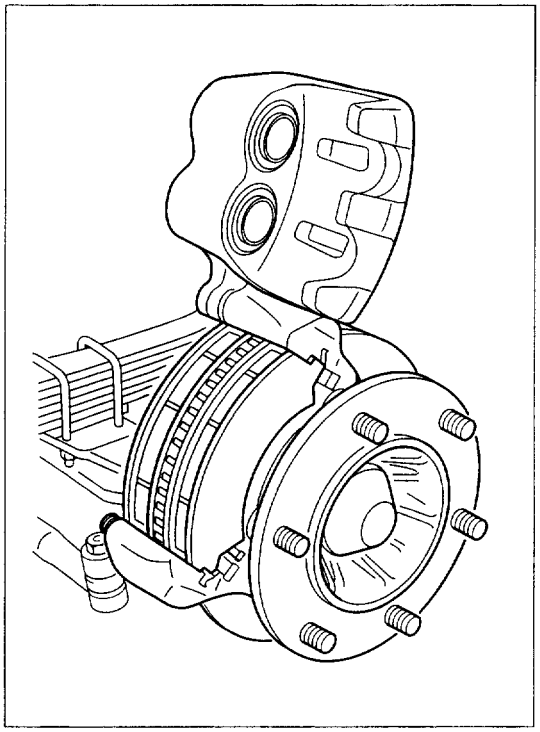

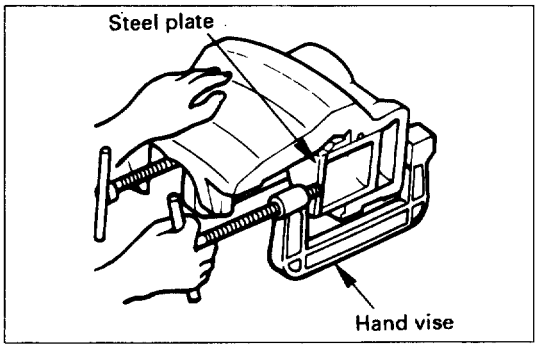

Front Disc Brake Pad Replacement

Use the following procedure to replace the front disc brake pads.

1. Loosen and remove the lock pin bolt from the lower side of the caliper.
2. Turn the caliper assembly up and wire it to the frame firmly so that the hose is not stretched.

NOTE:

Do not disconnect the brake hose.

3. Remove the pad assembly with clips and install the new pads along with new clips.

NOTE:

Be careful not to assemble the inner and outer pad reversely.

Keep the rotor face away from the brake oil or grease.

4. Use a hand vise to push the piston backward until it reaches the cylinder bottom, as the piston was pushed forward by the distance where the pad worn.

NOTE:

When using a hand vise, push the piston at its center.

NOTE:

Do not allow the foreign matters to get in the sleeve.

5. Install the lock pin into the support plate by turning the caliper carefully so that the piston boot and pin boot may not be wedged.

NOTE:

After assembling the caliper assembly, make sure that the piston boot and pin boot fitted correctly, and not damaged.

6. Tighten the lock pin bolt to the specified torque.

Lock Pin Bolt Torque	N·m (kg·m/lb·ft)
137 (14 / 101)	

INDEPENDENT SUSPENSION MODELS (NHR AND NKR)

REMOVAL

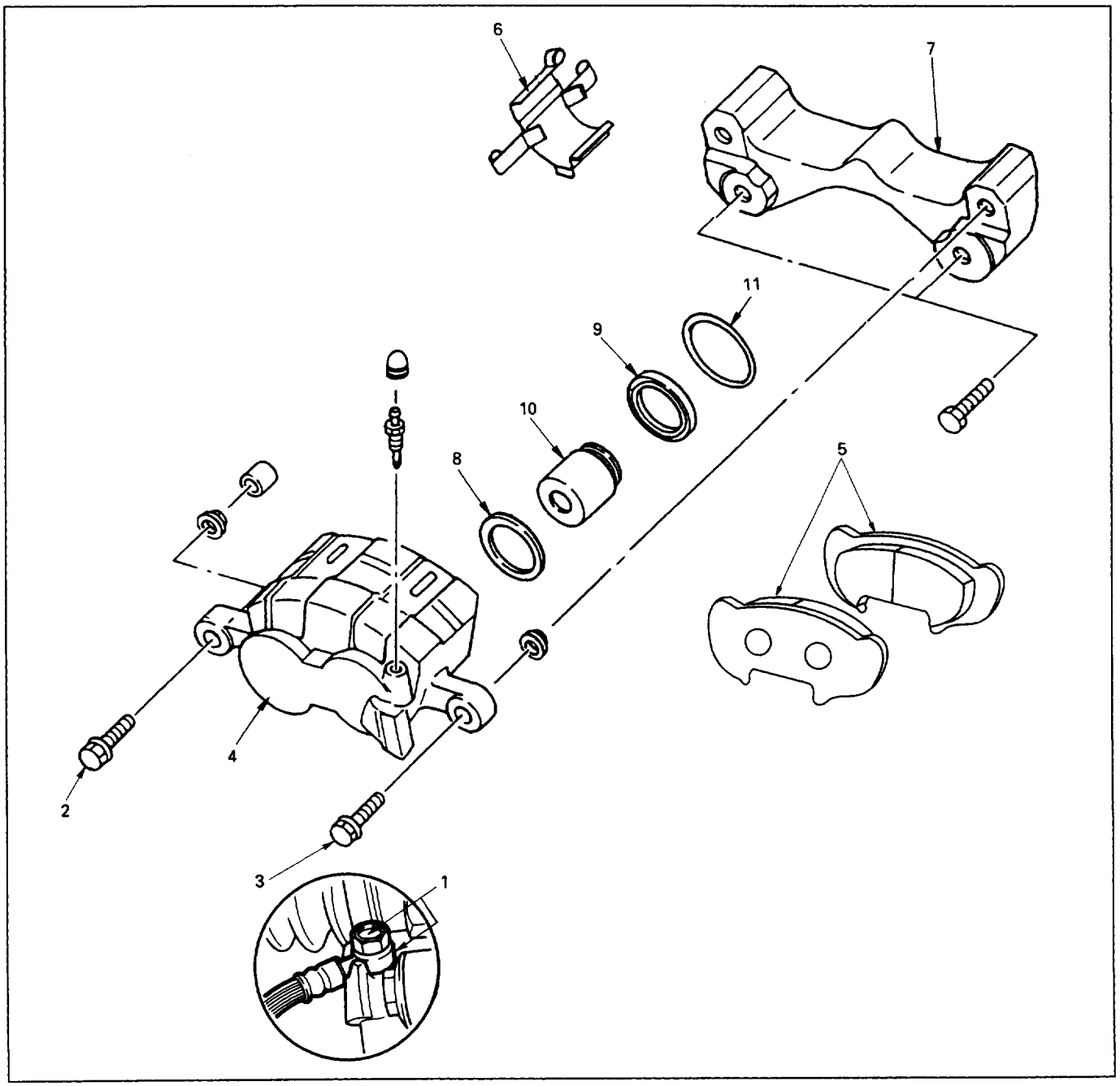

Removal Steps

1. Joint bolt and flexible hose
2. Lock pin bolt
3. Guide pin bolt
4. Caliper assembly
5. Pad
6. Pad clip
7. Support assembly
8. Boot ring
9. Piston boot
10. Piston
11. Piston seal

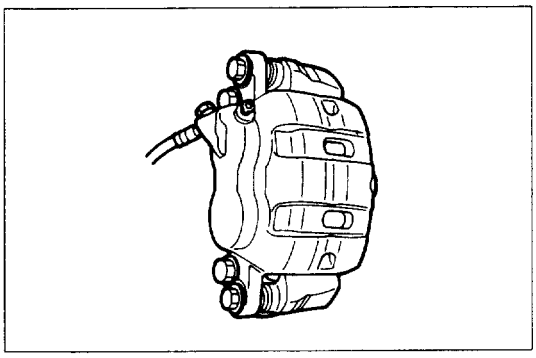

Removal Steps

1. Joint Bolt and Flexible Hose
2. Lock Pin Bolt
3. Guide Pin Bolt
4. Caliper Assembly

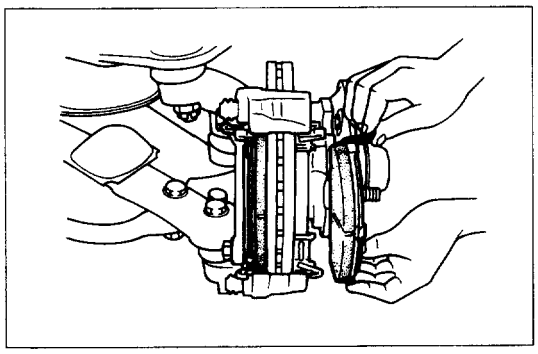

5. Pad

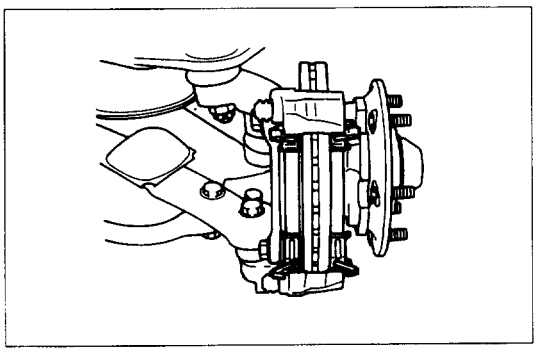

6. Pad Clip

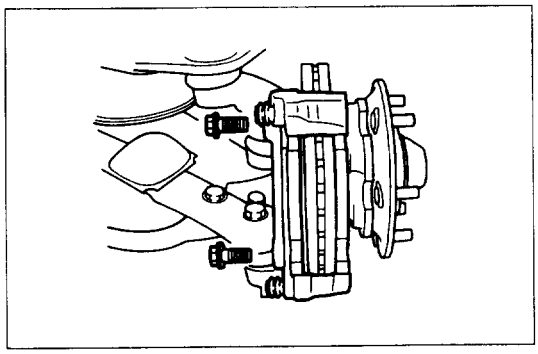

7. Support Assembly

8. Boot Ring
9. Piston Boot

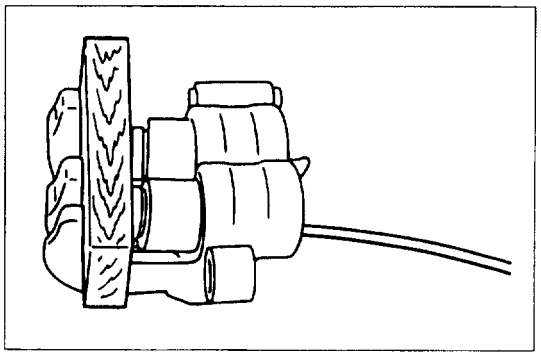

10. Piston

1. Place a piece of wood across the body assembly to prevent piston damage.
2. Apply approximately 196 kPa (2kg/cm^2, 28.4 psi) of compressed air to the body assembly oil port to remove the pistons.

11. Piston Seal

INSPECTION AND REPAIR

Make the necessary adjustments, repairs, and part replacements if excessive wear or damage is discovered during inspection.

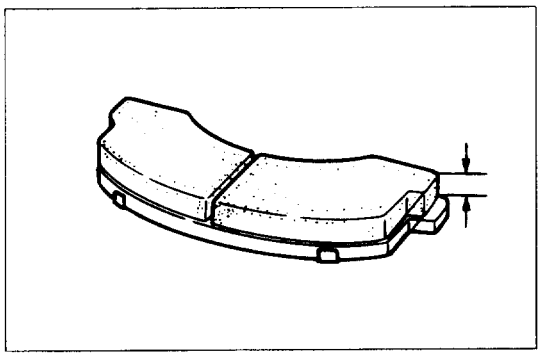

Pad

Use a vernier caliper to measure the pad thickness.

Pad Thickness mm(in)

Models	Standard	Limit
NHR	12 (0.472)	1 (0.039)
NKR	14 (0.551)	1 (0.039)

If the measured value is less than the specified limit, the pads must be replaced with the repair pad kit.

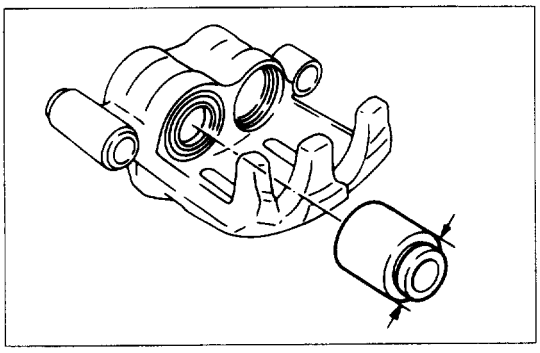

Piston and Cylinder Clearance

1. Use a micrometer to measure the piston diameter.
2. Use an inside dial indicator to measure the cylinder bore.
3. Calculate the piston and cylinder clearance.

Piston and Cylinder Clearance mm(in)

Standard	Limit
0.08 – 0.18 (0.0031 – 0.0071)	0.23 (0.0091)

If the clearance exceeds the specified limit, the piston and/or the body assembly must be replaced along with the repair seal kit.

Disc

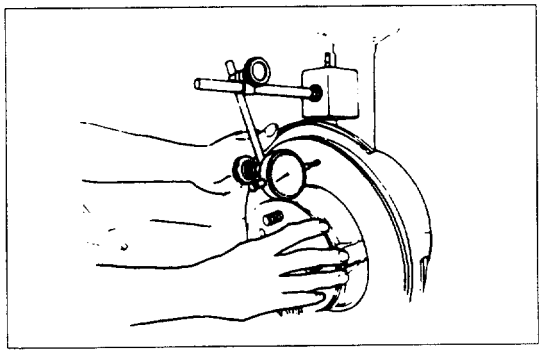

Lateral Runout

1. Adjust the wheel bearing correctly.
   Refer to "Front Axle" in Section 4.
2. Attach a dial indicator to some portion of the suspension so that the stem contacts the disc face about 29 mm (1.14 in) from the disc edge.
3. Move the disc one complete rotation.
   The lateral runout should not exceed 0.13 mm (0.005 in)

Maximum runout	mm (in)	0.13 (0.005)

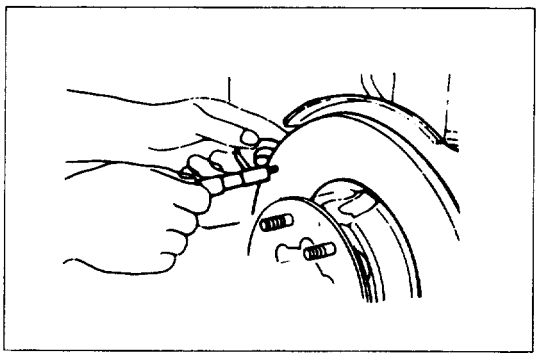

Parallelism and thickness

Parallelism is the measurement of the thickness of the disc at four or more points around the circumference of the disc. All measurement must be made at 29 mm (1.14 in) from the edge of the disc.

The disc thickness must not vary more than 0.010 mm (0.0004 in) from the point to point.

Maximum parallelism	mm (in)	0.02 (0.0008)

Disc Thickness mm (in)

Models	Standard	Limit
NHR	30.0 (1.181)	28.5 (1.122)
NKR	35.0 (1.378)	32.0 (1.260)

INSTALLATION

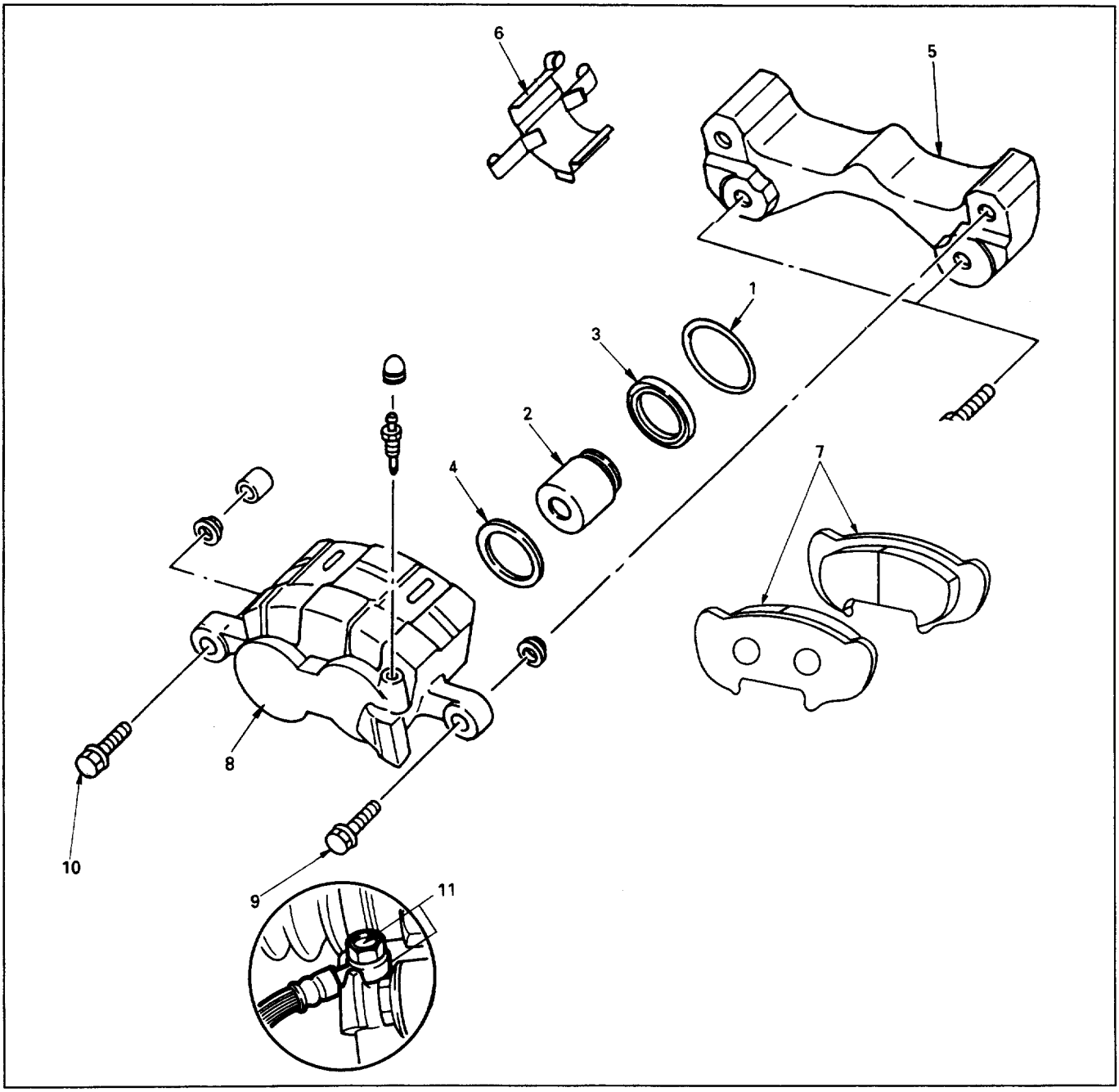

Installation Steps

1. Piston seal
2. Piston
3. Piston boot
4. Boot ring
5. Support Assembly
6. Pad clip
7. Pad
8. Caliper assembly
9. Guide pin bolt
10. Lock pin bolt
11. Joint bolt and flexible hose

Installation steps

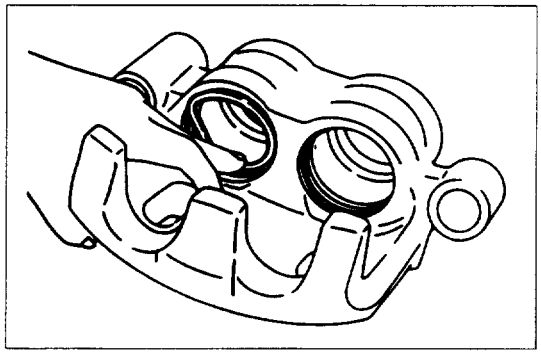

1. **Piston Seal**
   1. Apply rubber grease to the piston seal.
      The rubber grease is included in the seal kit.
   2. Install the piston seal to the cylinder bore groove.

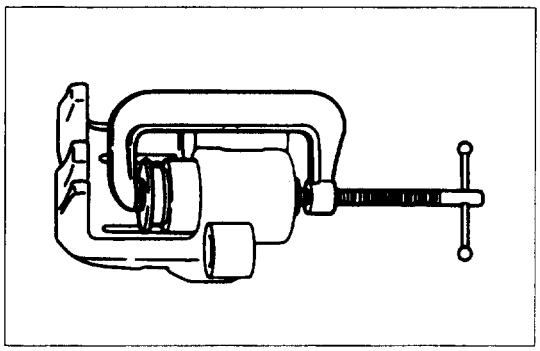

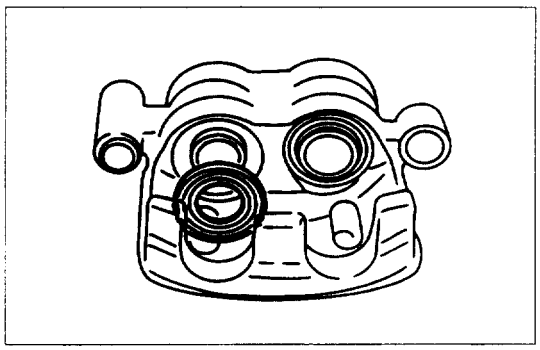

2. **Piston**
3. **Piston Boot**
4. **Boot Ring**
   1. Apply brake oil to the piston outer circumference.
   2. Use a hand vise to install the pistons to the cylinder.
   3. Apply special grease to the piston.
      This will prevent cylinder and piston corrosion.
   4. Install the piston boot outer lip to the cylinder bore groove.
      Install the piston boot inner lip to the piston groove.
      Handle the piston boot carefully.
   5. Install the boot ring to the cylinder bore groove.
      The boot ring must be completely installed to the groove.

5. **Support Assembly**

Support Assembly Bolt Torque	N·m (kg·m/lb·ft)
226 (23.0 / 116)	

6. **Pad Clip**
7. **Pad**
8. **Caliper Assembly**
9. **Guide Pin Bolt**
10. **Lock Pin Bolt**

Guide Pin Bolt/Lock Pin Bolt Torque	N·m (kg·m/lb·ft)
137 (14.0 / 101)	

11. **Joint Bolt and Flexible Hose**

Joint Bolt Torque	N·m (kg·m/lb·ft)
34 (3.5 / 25)	

FRONT DRUM BRAKE ASSEMBLY

REMOVAL

Two Leading Type

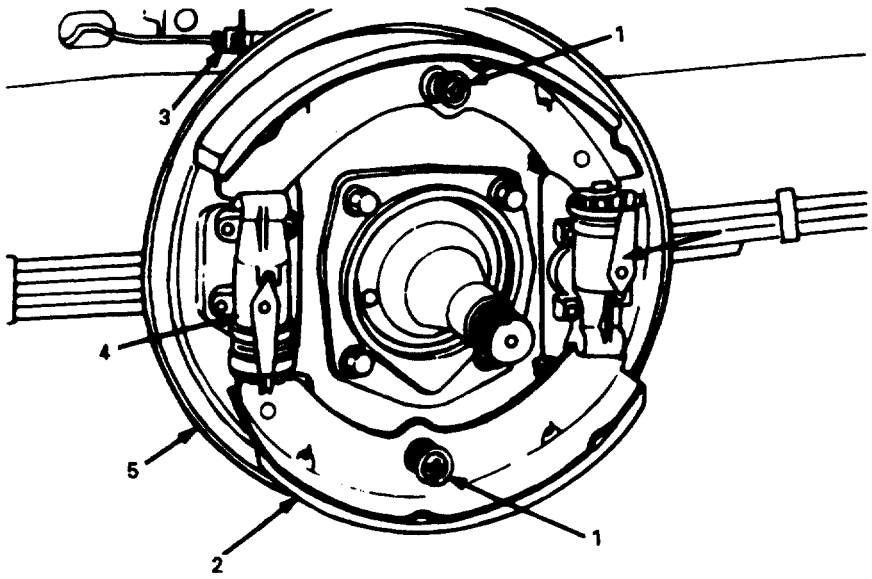

Removal Steps

1. Shoe holding spring, cup and pin
2. Brake shoe and return spring
3. Brake flexible hose and pipe
4. Wheel cylinder assembly
5. Back plate and oil shield cover

Dual Two Leading Type

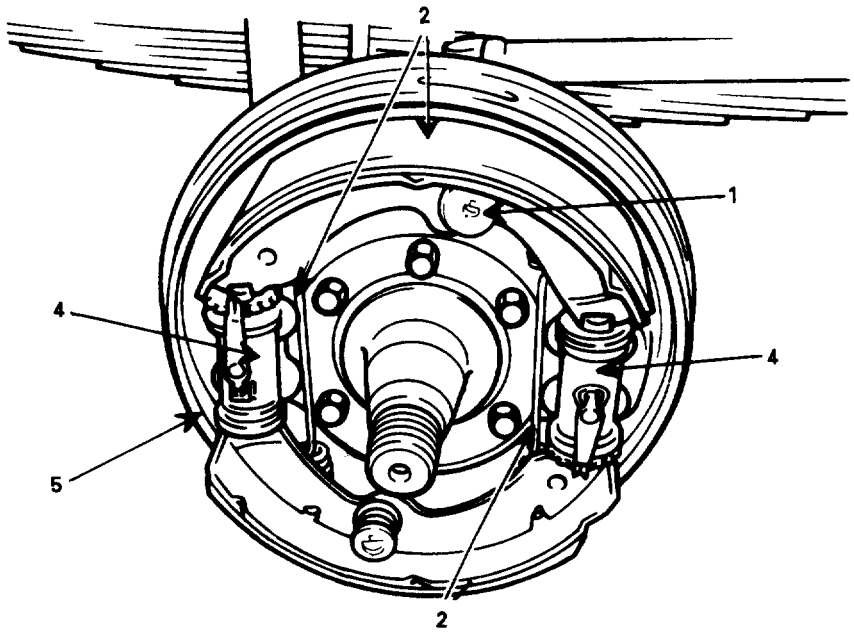

Removal Steps

1. Shoe holding spring, cup and pin
2. Brake shoe and return spring
3. Brake flexible hose and pipe
4. Wheel cylinder assembly
5. Back plate and oil shield cover

Removal Steps

1. **Shoe Holding Spring, Cup and Pin**
2. **Brake Shoe and Return Spring**
3. **Brake flexible Hose and Pipe**
   1 Place a tray beneath the flexible hose to receive the brake fluid.
   2 Loosen the union nut ①.
   3 Remove the clip ② and loosen the hose end ③ from the pipe to remove the flexible hose.

   NOTE:

   Take care not to twist the piping and the flexible hose.

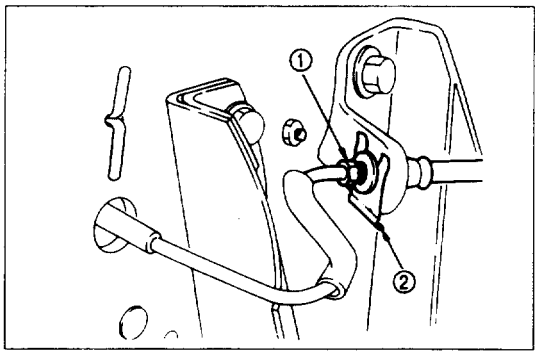

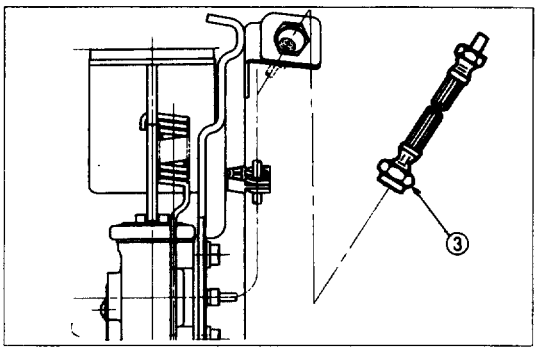

4. **Wheel Cylinder Assembly**
5. **Back Plate and Oil Shield Cover**

   Store all of the removed parts in a clean part tray.

INSPECTION AND REPAIR

Make the necessary adjustments, repairs, and part replacements if excessive wear or damage is discovered during inspection.

Brake Drum

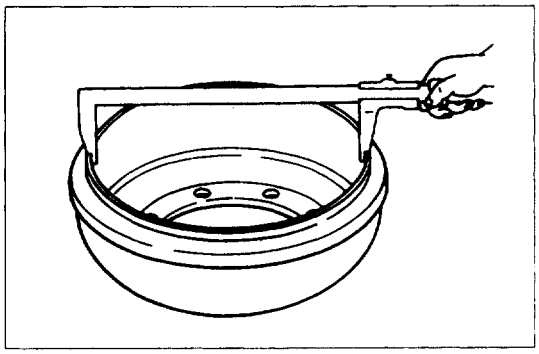

Brake Drum Inside Diameter

Visually inspect the brake drum for excessive wear and scoring.

If the brake drum is scored or worn, lathed to the specified limit.

Use a vernier caliper to measure the brake drum inside diameter.

Brake Drum Inside Diameter — mm (in)

Drum size	Standard	Limit
279.4	279.4 (11.00)	281.0 (11.06)
300.0	300.0 (11.81)	301.5 (11.87)
320.0	320.0 (12.60)	321.5 (12.66)
Out of round	0.13 (0.005) or less	—

Brake Lining

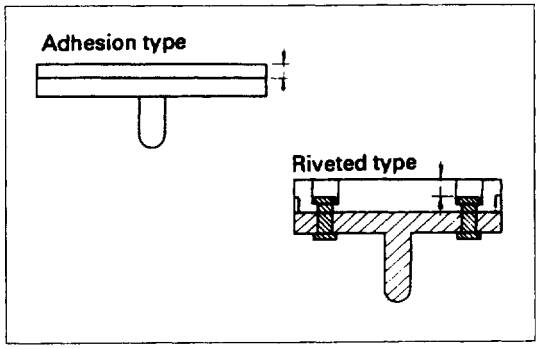

Brake Lining Thickness Measurement

Use a vernier caliper to measure the brake lining thickness or the rivet depth.

If the measured value is less than the specified limit, the brake shoe assembly and/or the lining must be replaced.

Brake Lining Thickness or Rivet Depth — mm (in)

Limit	1.0 (0.039)

Brake Lining Replacement

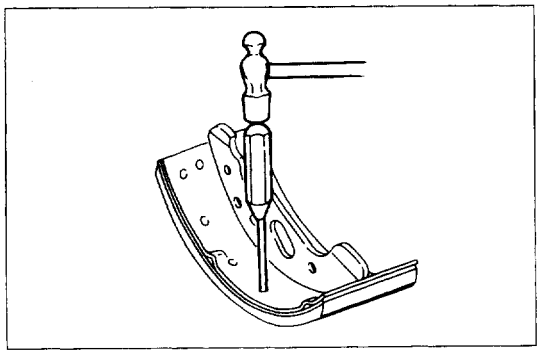

Brake Lining Removal (Riveted type only)

1. Remove the rivet caulking portions with a hammer and chisel.
2. Remove the rivets with a hammer and punch.
3. Inspect the brake shoe for cracking.

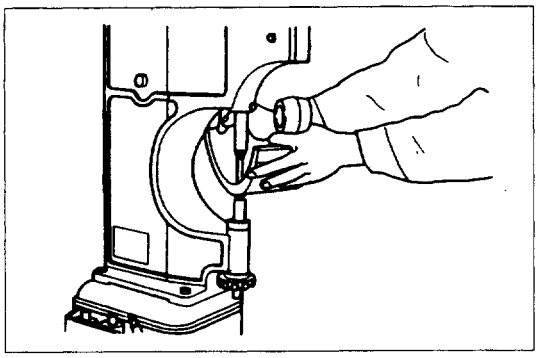

Brake Lining Installation (Riveted type only)

1. Install the brake lining the rivets to the brake shoe.
2. Place the brake shoe assembly in the air hydraulic riveter.
3. Use the air hydraulic riveter to set and caulk each of the rivets.
4. Start riveting at the center of lining and work towards the ends.

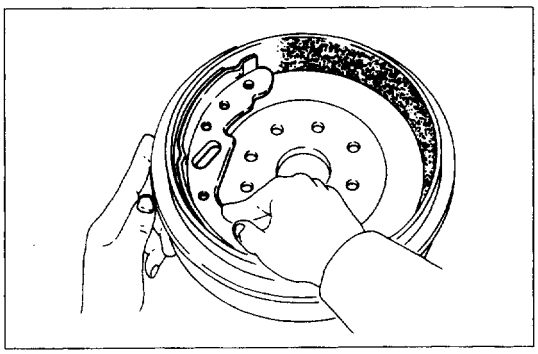

Brake Lining and Drum Contact

1. Apply chalk powder to the entire inside brake drum surface.
2. Place the brake shoe assembly in the inside brake drum.
3. Move the brake shoe assembly around the inside brake drum.

   Check for uniform contact between the brake lining and the brake drum.
4. Correct any areas having poor contact with sandpaper.
5. Repeat Steps 1 through 4 until the contact between the brake lining and the brake drum is perfect.

INSTALLATION

Two Leading Type

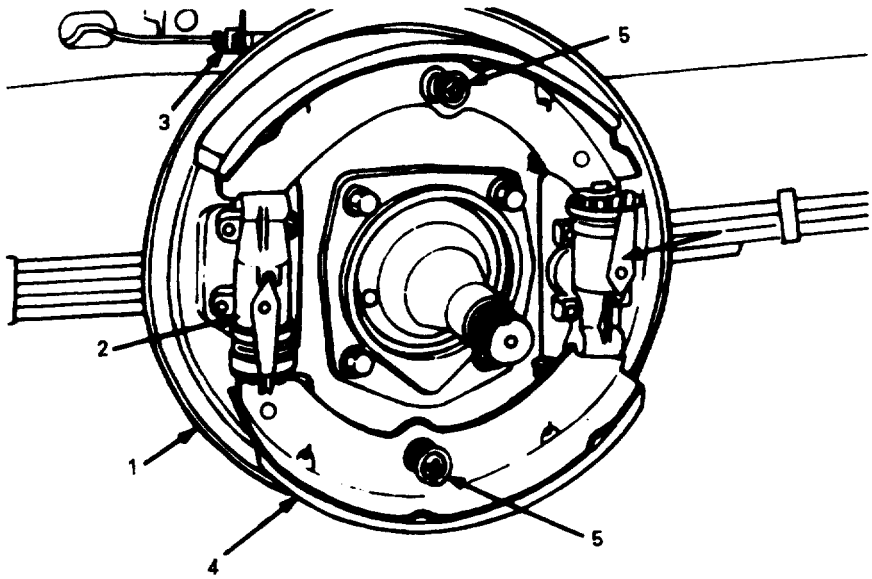

Installation Steps

1. Back plate and oil shield cover
2. Wheel cylinder assembly
3. Brake flexible hose and pipe
4. Brake shoe and return spring
5. Shoe holding spring, cup and pin

Dual Two Leading Type

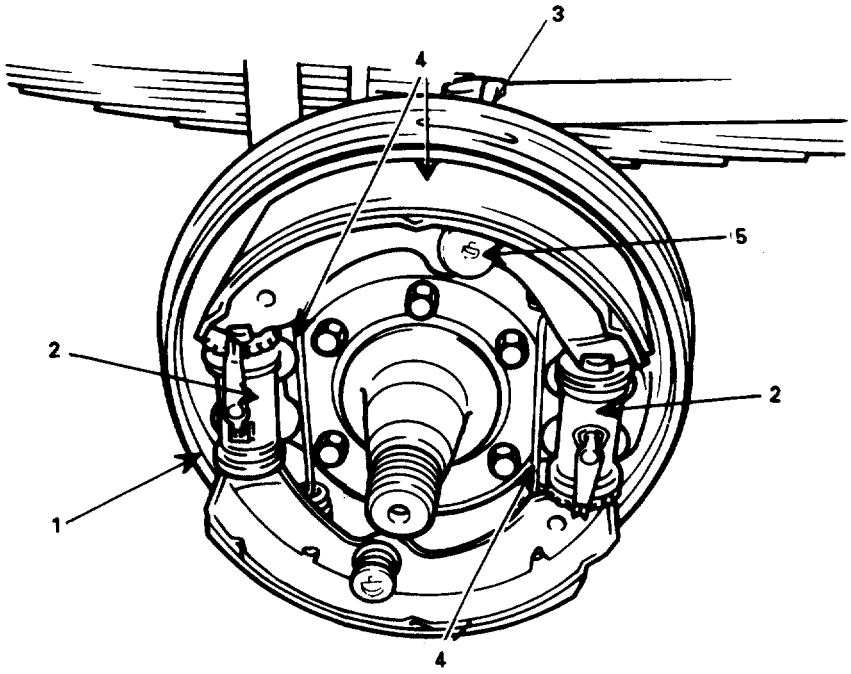

Installation Steps

1. Back plate and oil shield cover
2. Wheel cylinder assembly
3. Brake flexible hose and pipe
4. Brake shoe and return spring
5. Shoe holding spring, cup and pin

Installation Steps

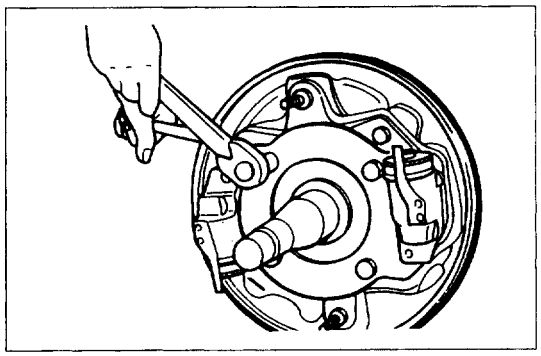

1. Back Plate and Oil Shield cover

Tighten the back plate and oil shield cover bolts to the specified torque.

Back Plate and Oil Shield Cover Bolt Torque	N·m (kg·m/lb·ft)
NPS model	98 (10.0 / 72)
NQR model	157 (16.0 / 116)
Others	69 (7.0 / 51)

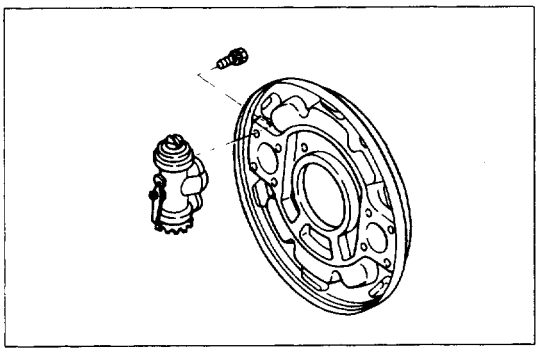

2. Wheel Cylinder Assembly

Tighten the wheel cylinder assembly bolts to the specified torque.

Wheel Cylinder Assembly Bolt Torque		N·m (kg·m/lb·ft)
Drum Inside Dia. mm (in)	Lining Width mm (in)	———
279.4 (11.00)	60 (2.36)	27 (2.8 / 20)
300.0 (11.81)	75 (2.95)	34 (3.5 / 25)
320.0 (12.60)		43 (4.4 / 32)
320.0 (12.60)	100 (3.94)	74 (7.5 / 54)
320.0 (12.60)	120 (4.72)	94 (9.6 / 69)

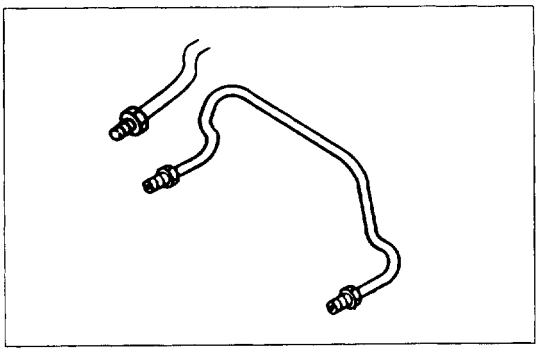

3. Brake Flexible Hose and Pipe

Tighten the brake pipe flare nuts to the specified torque

Brake Pipe Flare Nut Torque	N·m (kg·m/lb·ft)
16 (1.6 / 12)	

Note:

Take care not to twist the piping and the flexible hose.

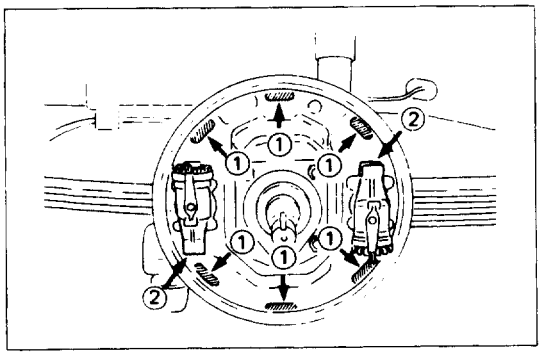

4. Brake Shoe and Return Spring (Two Leading Type)

1. Before setting the brake shoes, apply a thin coat of molybdenum disulfide grease to the back plate portions ① contacting the brake shoe edge as shown in the illustrations.
2. Apply a coat of molybdenum disulfide grease to the wheel cylinder parts contacting the brake shoe ②.

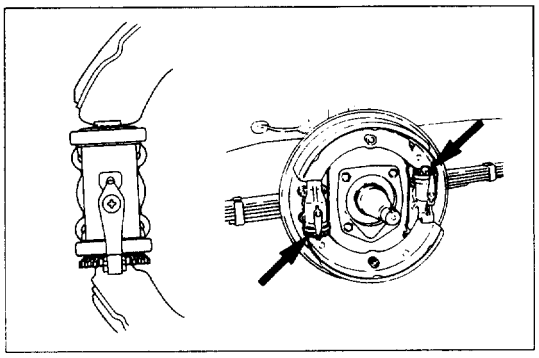

3. Set the brake shoe assembly to the cylinder adjusting screw at the brake shoe small angle end.
   Do not install it at the round end to the adjusting screw.
4. Install the brake shoes and the return springs to the wheel cylinders.
   Keep the lining surface clean.

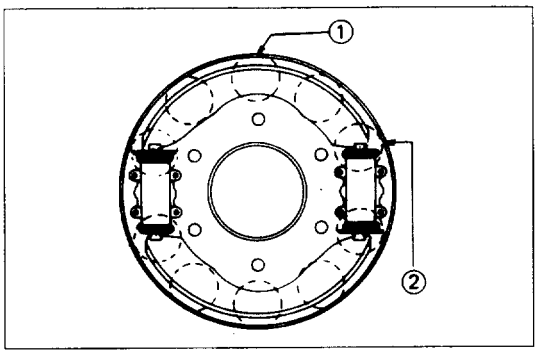

4. Brake Shoe and Return Spring (Dual Two Leading Type)

1. Before setting the brake shoes, apply a thin coat of molybdenum disulfide grease to the back plate portions ① contacting the brake shoe edge as shown in the illustrations.
2. Apply a coat of molybdenum disulfide grease to the wheel cylinder parts contacting the brake shoe ②.

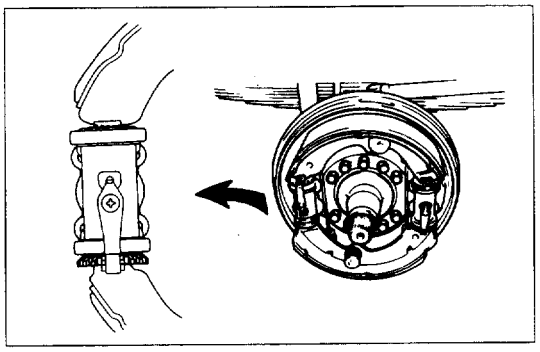

3. Set the brake shoe assembly to the cylinder adjusting screw at the brake shoe small angle end.
   Do not install it at the round end to the adjusting screw.
4. Install the brake shoes and the return springs to the wheel cylinders.
   Keep the brake lining clean.

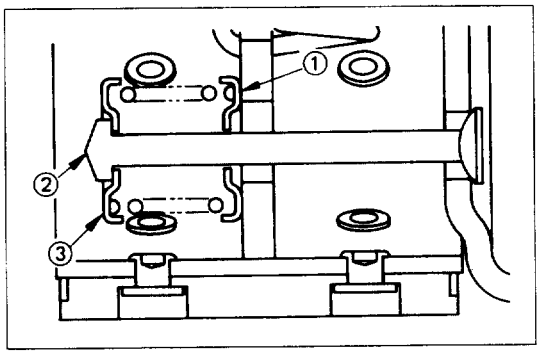

5. Shoe Holding Spring, Cup and Pin

1. Before installing the holding pin.
   Apply a coat of molybdenum disulfide grease to the holding cup seating faces ① contacting the brake shoe.

2. After installation of the pins, cups and the springs, make sure the pin ② seats to the cup ③ properly.

After assembly, adjust the lining clearance and air bleeding the brake, referring to the paragraph on servicing.

REAR DRUM BRAKE ASSEMBLY

REMOVAL

These removal steps are based on the without auto-adjuster type brake

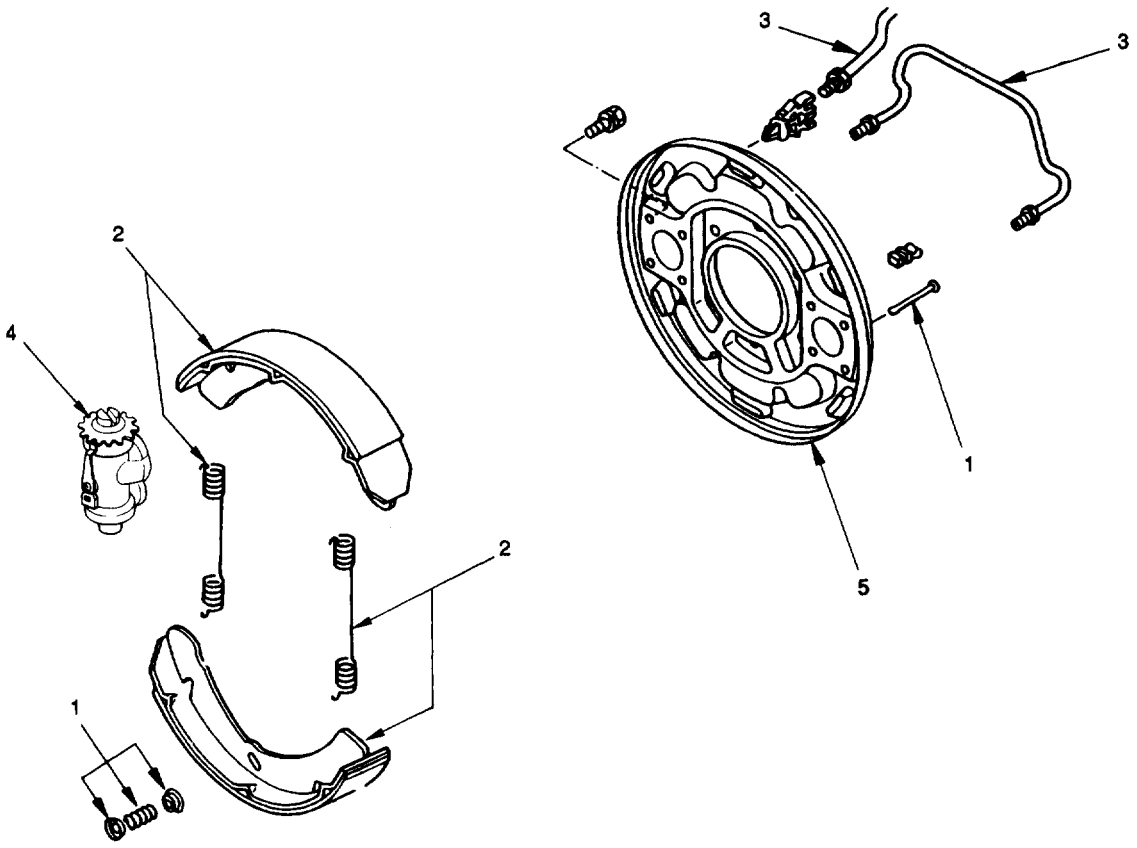

Removal Steps

1. Shoe holding spring, cup and pin
2. Brake shoe and return spring
3. Brake pipe
4. Wheel cylinder assembly
5. Back plate

Removal Steps

1. **Shoe Holding Spring, Cup and Pin**
2. **Brake Shoe Return Spring**
3. **Brake Pipe**
4. **Wheel Cylinder Assembly**
5. **Back Plate**

   Store all of the removed parts in a clean part tray.

BRAKE DRUM REMOVAL (WITH AUTO-ADJUSTER)

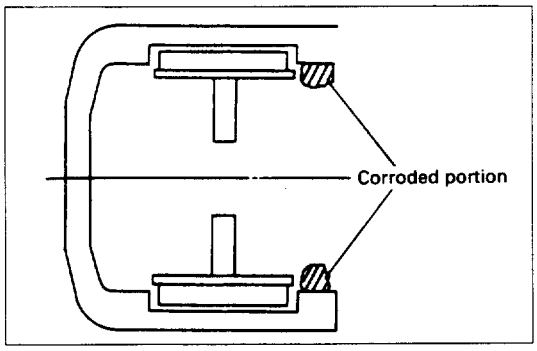

Removal Procedure

If the brake drum has step wear or the brake drum edge is corroded, it will be difficult to remove the brake drum.

The following procedure will make brake drum removal easier.

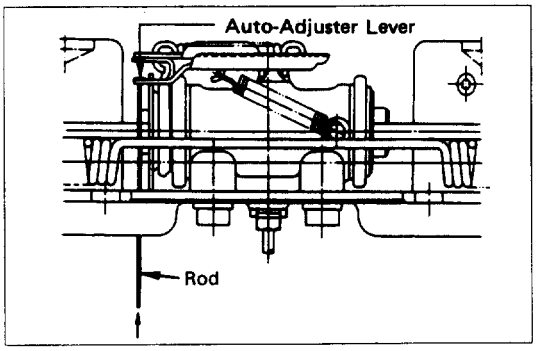

Drum Inside Diameter 228.6 mm (9.0 in)

1. Remove the rubber covers from the brake lining clearance adjusting hole and auto-adjuster lever release hole.
2. Push up the auto-adjuster lever with a long drift or a suitable rod

   (Outside diameter: 4 mm (0.15 in) length: 80 mm (3.1 in)

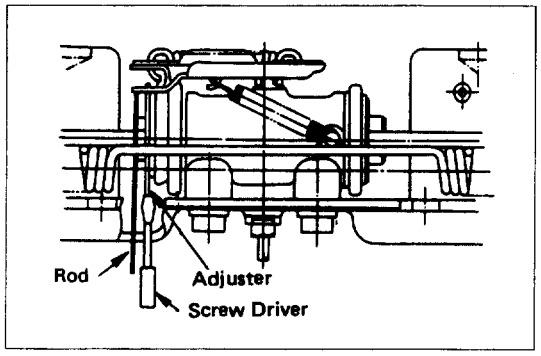

3. Hold the auto-adjuster lever stationary.
   Use a screwdriver to rotate adjusters at back of the brake to provide clearance between lining and drum.

NOTE:

Be sure to push up the auto-adjuster lever (Step 2).

Failure to do so will result in damage to the teeth of the auto-adjuster lever.

Take care not to damage the rubber boot with the bar or the screwdriver.

4. Remove the brake drum.

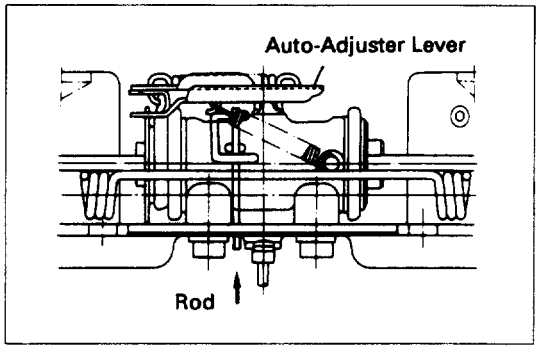

Drum Inside diameter 279.4 mm (11.0 in), 300.0 mm (11.81 in) and 320.0 mm (12.60 in)

1. Push the rod to push up the auto-adjuster lever.

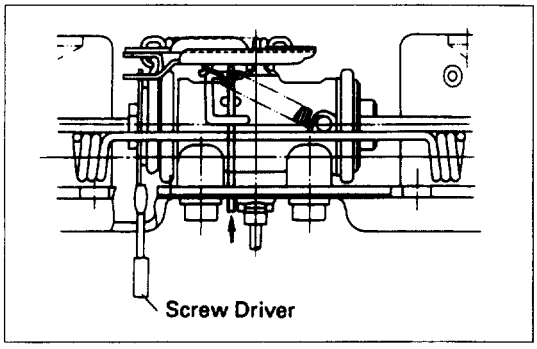

2. Remove the rubber cover from the brake lining clearance adjusting hole.
3. Hold the auto-adjuster lever stationary.
   Use a screwdriver to rotate adjusters at back of the brake to provide clearance between lining and drum.

NOTE:

Be sure to push up the auto-adjuster lever (Step 1).

Failure to do so will result in damage to the teeth of the auto-adjuster lever.

Take care not to damage the rubber boot with the bar or the screwdriver.

4. Remove the brake drum.

INSPECTION AND REPAIR

Make the necessary adjustments, repairs, and part replacements if excessive wear or damage is discovered during inspection.

Brake Drum

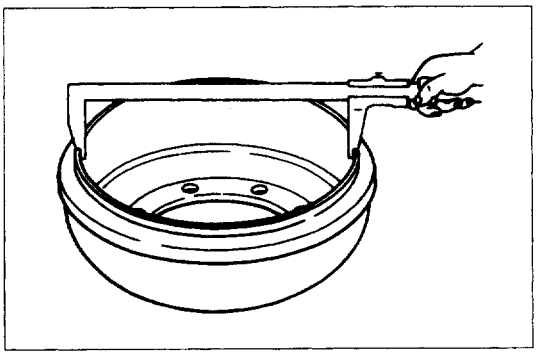

Brake Drum Inside Diameter

Visually inspect the brake drum for excessive wear and scoring.

If the brake drum is scored or worn, lathed to the specified limit.

Use a vernier caliper to measure the brake drum inside diameter.

Brake Drum Inside Diameter — mm (in)

Drum size	Standard	Limit
228.6	228.6 (9.00)	230.0 (9.06)
279.4	279.4 (11.00)	281.0 (11.06)
300.0	300.0 (11.81)	301.5 (11.87)
320.0	320.0 (12.60)	321.5 (12.66)
Out of round	0.13 (0.005) or less	

Brake Lining

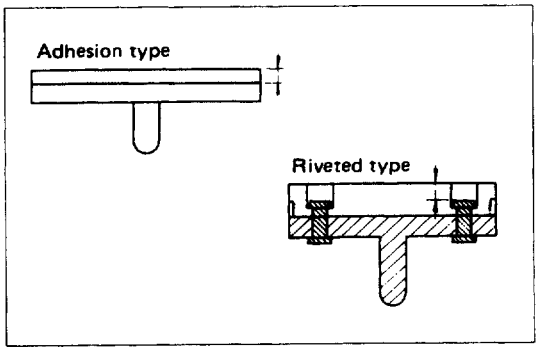

Brake Lining Thickness Measurement

Use a vernier caliper to measure the brake lining thickness or the rivet depth.

If the measured value is less than the specified limit, the brake shoe assembly and/or the lining must be replaced.

Brake Lining Thickness or Rivet Depth — mm (in)

Limit	1.0 (0.039)

Brake Lining Replacement

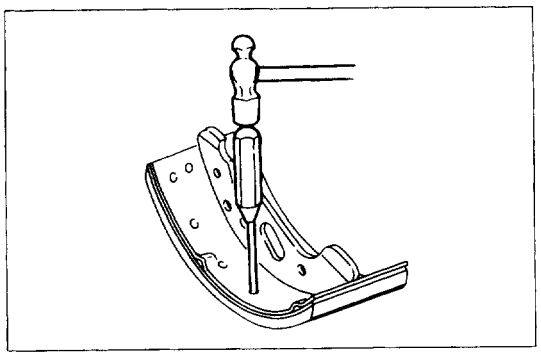

Brake Lining Removal (Riveted type only)

1. Remove the rivet caulking portions with a hammer and chisel.
2. Remove the rivets with a hammer and punch.
3. Inspect the brake shoe for cracking.

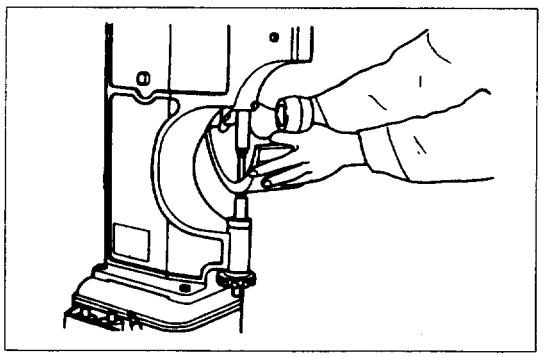

Brake Lining Installation (Riveted type only)

1. Install the brake lining and the rivets to the brake shoe.
2. Place the brake shoe assembly in the air hydraulic riveter.
3. Use the air hydraulic riveter to set and caulk each of the rivets.
4. Start riveting at the center of lining and work towards the ends.

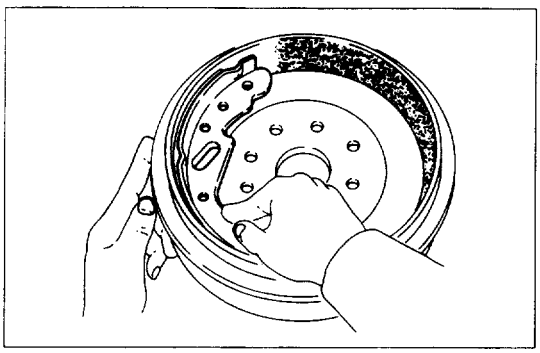

Brake Lining and Drum Contact

1. Apply chalk powder to the entire inside brake drum surface.
2. Place the brake shoe assembly in the inside brake drum.
3. Move the brake shoe assembly around the inside brake drum.

   Check for uniform contact between the brake lining and the brake drum.
4. Correct any areas having poor contact with sandpaper.
5. Repeat Steps 1 through 4 until the contact between the brake lining and the brake drum is perfect.

INSTALLATION

These installation steps are based on the without auto-adjuster type brake

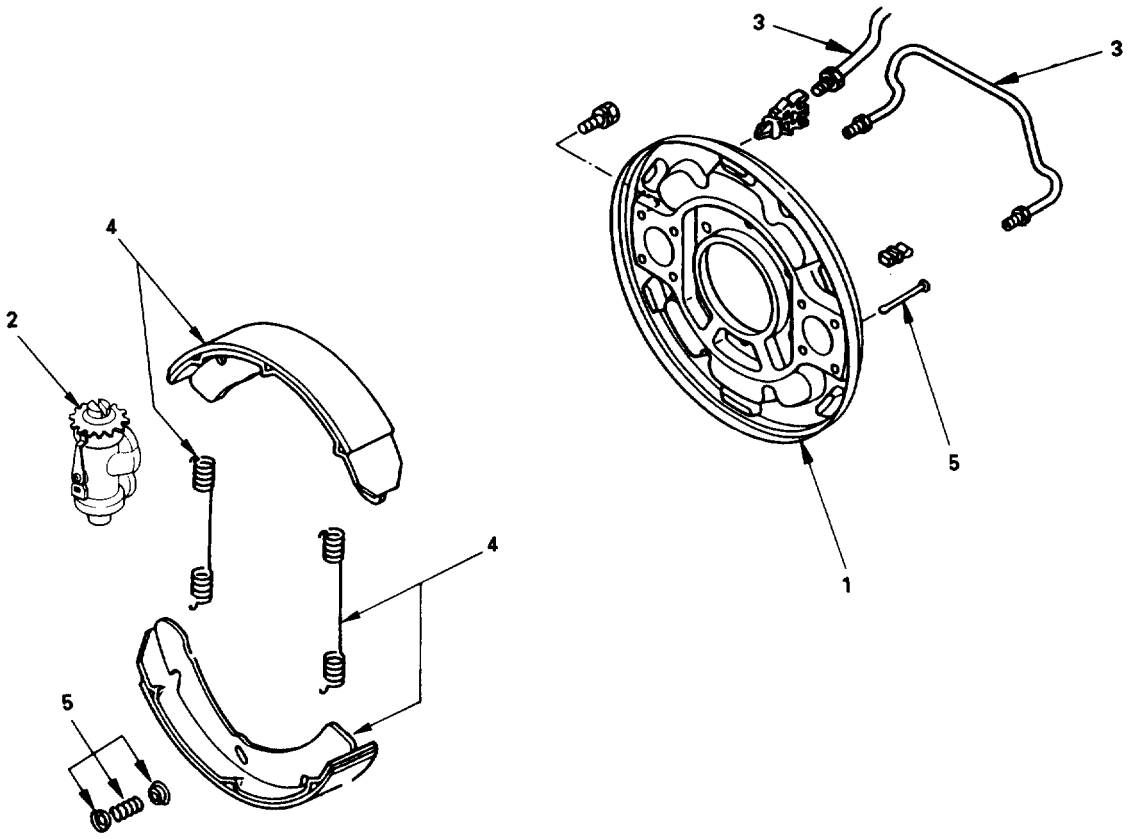

Installation Steps

1. Back plate
2. Wheel cylinder assembly
3. Brake pipe
4. Brake shoe and return spring
5. Shoe holding spring, cup and pin

Installation Steps

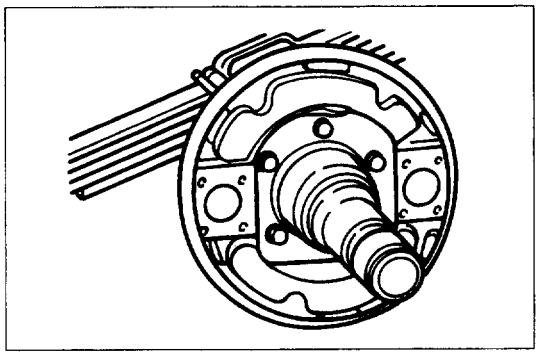

1. Back Plate

Tighten the back plate bolts to the specified torque.

Back Plate Bolt Torque		N·m (kg·m/lb·ft)
Drum Inside Dia. mm (in)	Lining Width mm (in)	
228.6 (9.00)	75 (2.95)	108 (11.0 / 80)
279.4 (11.00)	60 (2.36)	74 (7.5 / 54)
300.0 (11.81)	75 (2.95)	* 44 (4.5 / 33) **108 (11.0 / 80)
320.0 (12.60)	75 (2.95)	43 (4.4 / 32)
	100 (3.94)	94 (9.6 / 69)
	120 (4.72)	94 (9.6 / 69)

*Single Tire models **Dual Tire models

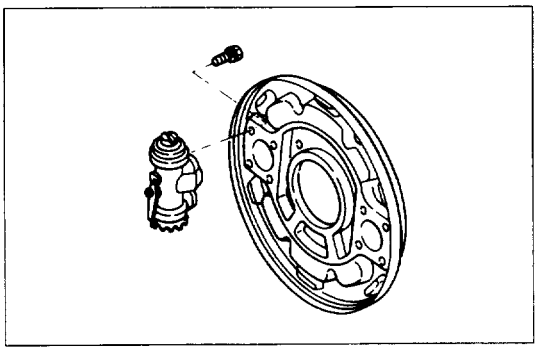

2. Wheel Cylinder Assembly

Tighten the wheel cylinder assembly bolts to the specified torque.

Wheel Cylinder Assembly Bolt Torque		N·m (kg·m/lb·ft)
Drum Inside Dia. mm (in)	Lining Width mm (in)	
228.6 (9.00)	75 (2.95)	34 (3.5 / 25)
279.4 (11.00)	60 (2.36)	27 (2.8 / 20)
300.0 (11.81)	75 (2.95)	34 (3.5 / 25)
320.0 (12.60)	75 (2.95)	43 (4.4 / 32)
	100 (3.94)	94 (9.6 / 69)
	120 (4.72)	94 (9.6 / 69)

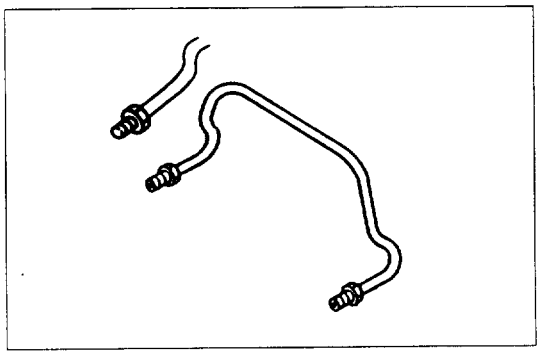

3. Brake Pipe

Tighten the brake pipe flare nuts to the specified torque

Brake Pipe Flare Nut Torque	N·m (kg·m/lb·ft)
16 (1.6 / 12)	

NOTE:

Take care not to twist the piping.

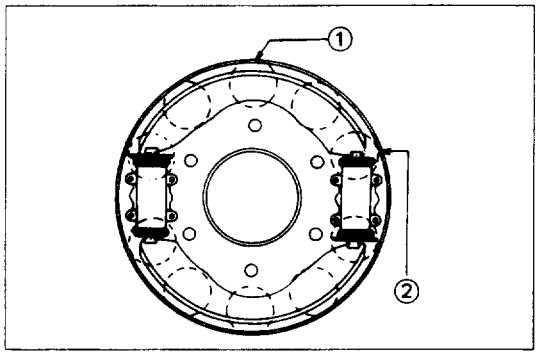

4. Brake Shoe and Return Spring

1. Before setting the brake shoes, apply a thin coat of molybdenum disulfide grease to the back plate portions ① contacting the brake shoe edge as shown in the illustrations.
2. Apply a coat of molybdenum disulfide grease to the wheel cylinder parts contacting the brake shoe ②.

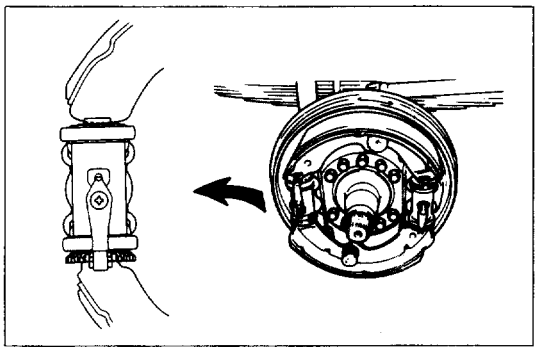

3. Set the brake shoe assembly to the cylinder adjusting screw at the brake shoe small angle end.
   Do not install it at the round end.
4. Install the brake shoes and the return springs to the wheel cylinders.
   Keep the brake lining clean.

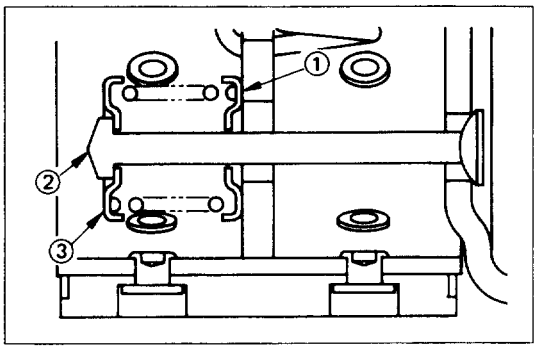

5. Shoe Holding Spring, Cup and Pin

1. Before installing the holding pin.
   Apply a coat of molybdenum disulfide grease to the holding cup seating faces ① contacting the brake shoe.
2. After installation of the pins, cups and the springs, make sure the pin ② seats to the cup ③ properly.

BRAKE DRUM INSTALLATION

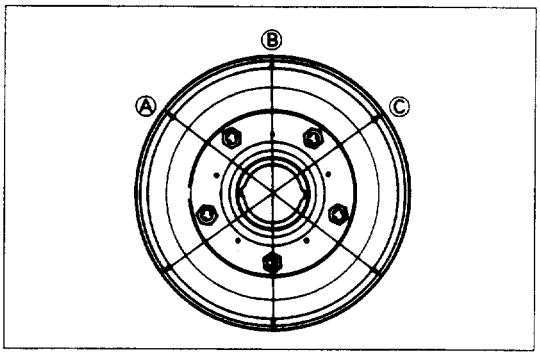

1. Measure the internal diameter of the brake drum.
   - Take measurement of the distance at Ⓐ, Ⓑ and Ⓒ points.

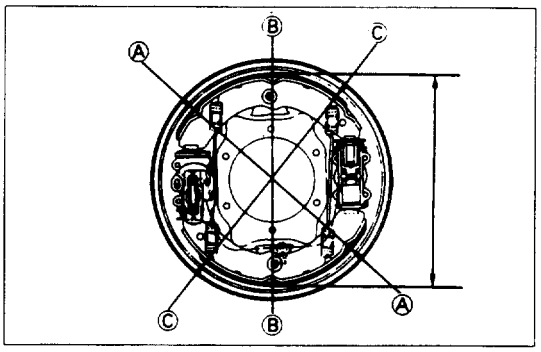

2. Measure the external diameter of the brake shoe.
   - Take measurement of the distance at Ⓐ, Ⓑ and Ⓒ points.
3. Turn the adjuster gear so that the difference between the internal diameter of the brake drum and the internal diameter of the brake shoe becomes 0.6 mm.
4. Install the brake drum.

BRAKE PEDAL AND CONTROL

BRAKE VACUUM BOOSTER AND BRAKE PEDAL ASSEMBLY

REMOVAL

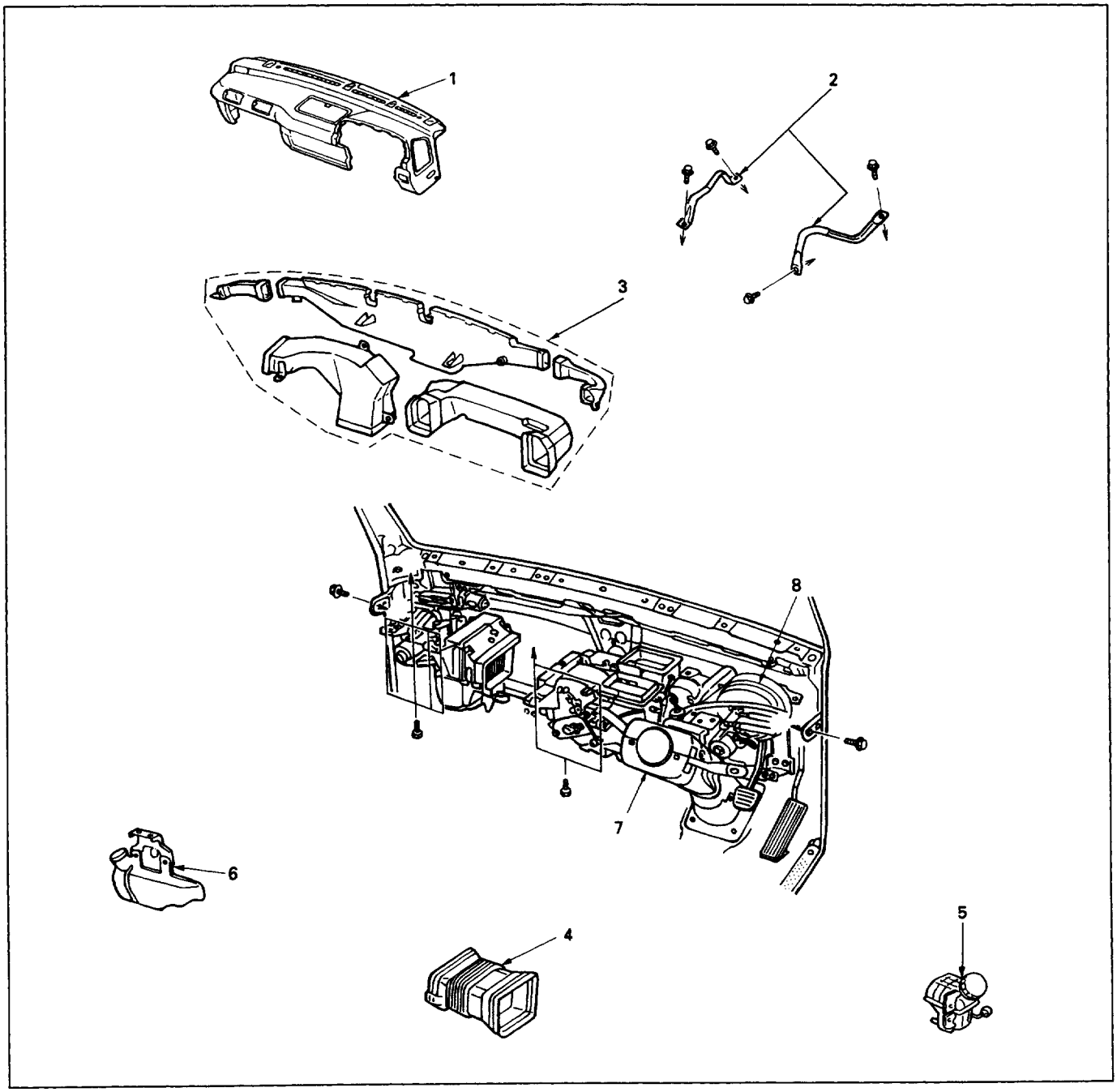

Removal Steps

1. Instrument panel
2. Stay
3. Defroster nozzle and vent duct
4. Center duct (NPR model only)
5. Brake and clutch fluid reservoir
6. Windshield washer tank
7. Steering cowl assembly
8. Vacuum booster and brake pedal assembly

Removal Steps

1. **Instrument Panel**
2. **Stay**
3. **Defroster Nozzle and Vent Duct**
4. **Center Duct (NPR model only)**
5. **Brake and Clutch Fluid Reservoir**
6. **Windshield Washer Tank**

   For the removal procedure for above, refer to Section 2 Frame and Cab Workshop Manual.

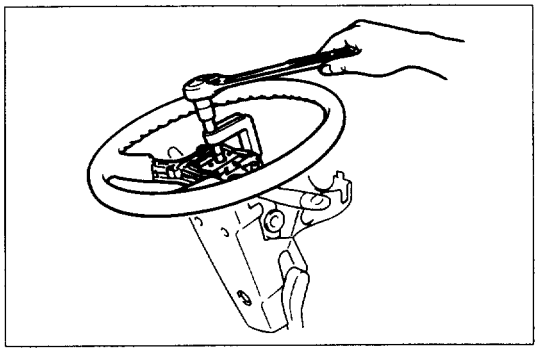

7. **Steering Cowl Assembly**

   Wheel remover: 5-8840-2215-0

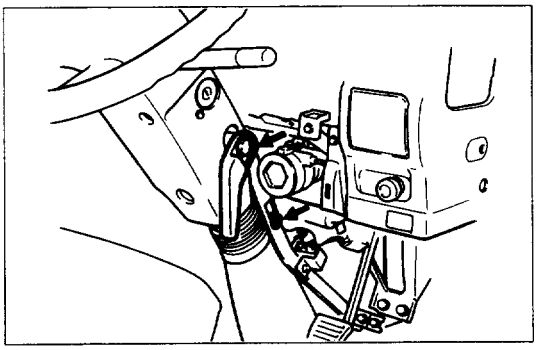

Remove the tilt lever and steering cowl

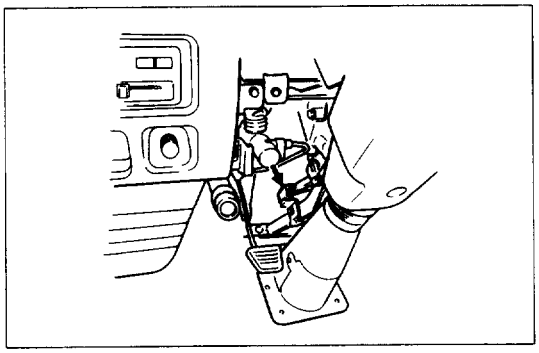

Disconnect the wire harness connectors.

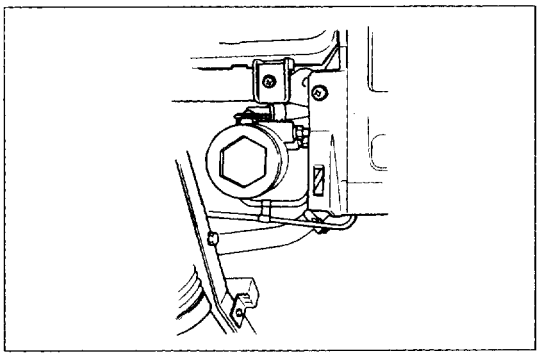

8. Vacuum Booster and Brake Pedal Assembly

1. Disconnect the brake pipes and hoses.
2. Plug or cover the brake rubber hoses, pipes and the master cylinder brake fluid ports to prevent brake fluid spillage.

   If brake fluid spillage occurs, wipe it up immediately.
3. Remove the brake pedal bracket fixing bolts and vacuum booster (except hydromaster type) and brake pedal assembly.

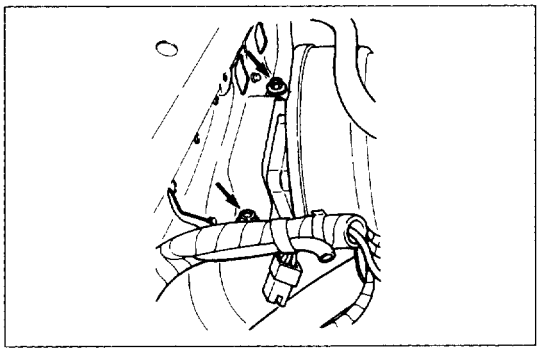

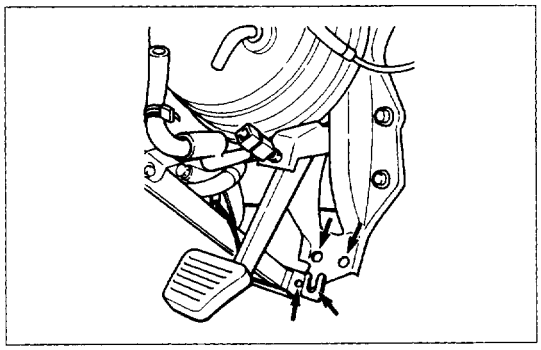

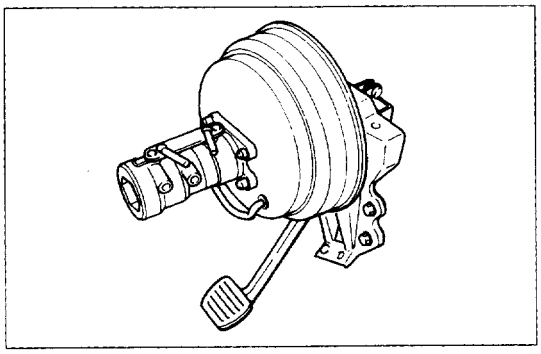

3. Remove the brake pedal and master cylinder.

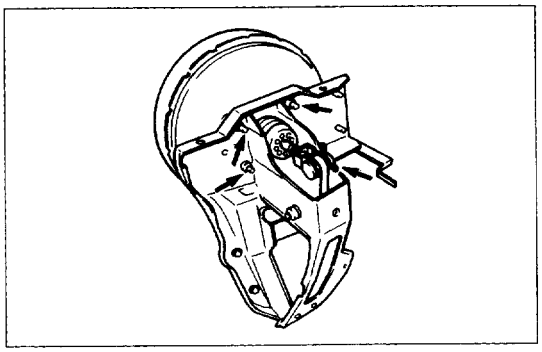

4. Remove the vacuum booster assembly from brake pedal assembly (except hydromaster type).

INSTALLATION

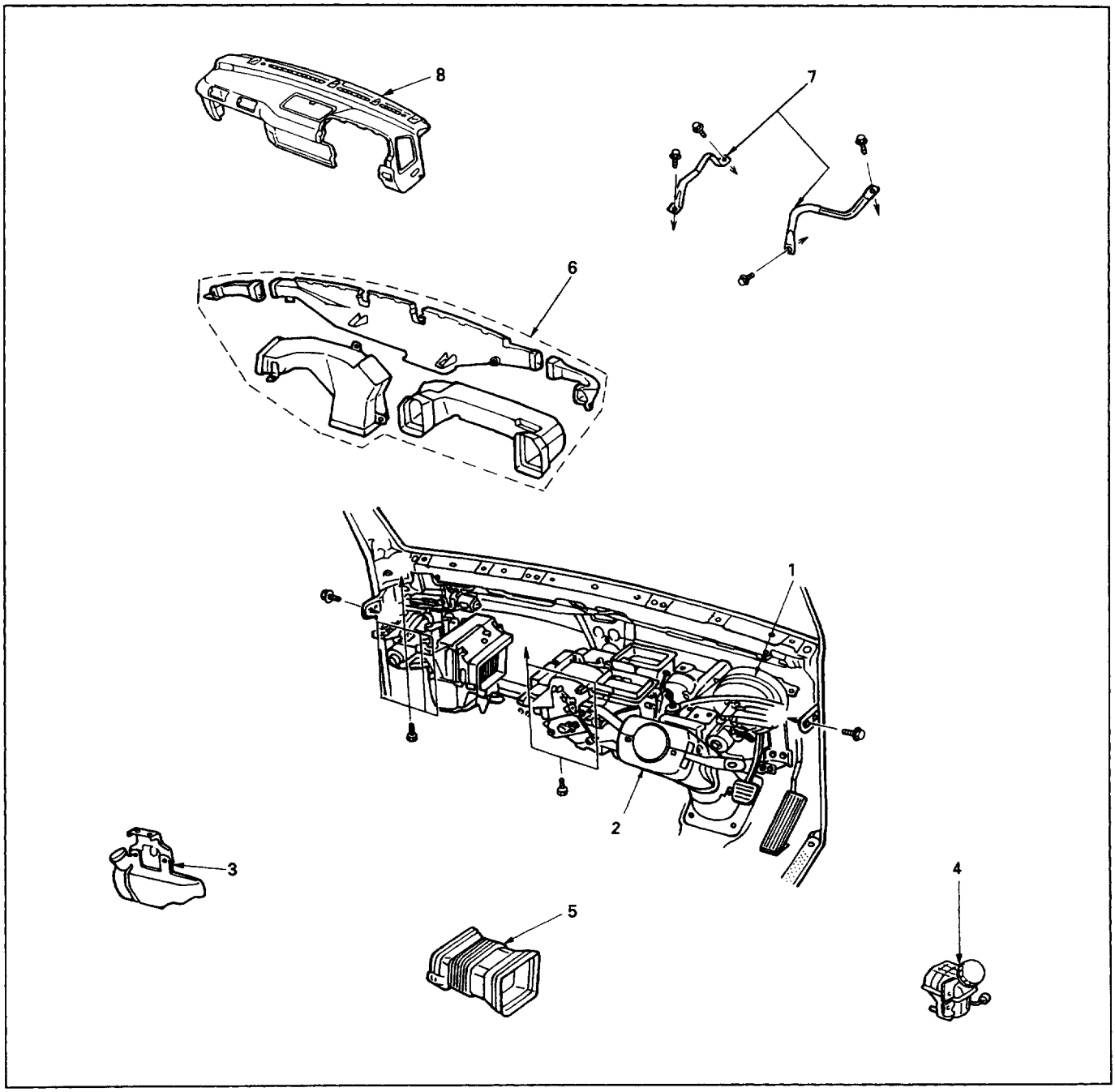

Installation Steps

1. Vacuum booster and brake pedal assembly
2. Steering cowl assembly
3. Windshield washer tank
4. Brake and clutch fluid reservoir
5. Center duct (NPR model only)
6. Defroster nozzle and vent duct
7. Stay
8. Instrument panel

Installation steps

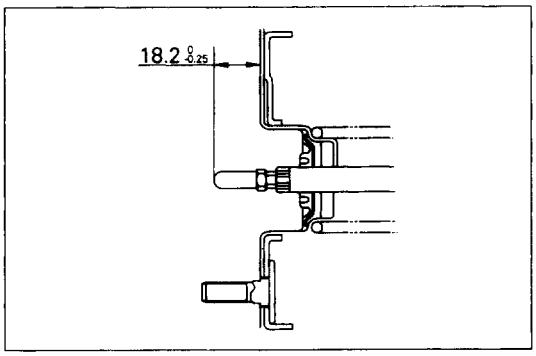

1. Vacuum Booster and Brake Pedal Assembly

Vacuum Booster (Master Vac) type:

1. Vacuum booster cannot be overhauled. If it is found faulty, replace its assembly with a new one.
2. Make necessary adjustment, so that distance between end of push rod and flange face is adjusted to 18.2 mm (0.717 in) in condition of vacuum applying.

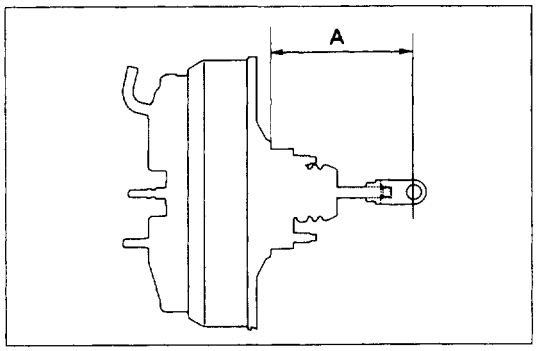

3. Push rod length Ⓐ is measured from the center of the clevis pin hole to the mounting surface of the brake pedal bracket. Adjusted to 109 mm (4.291 in); without spacer, 129 mm (5.079 in); with spacer and tighten the lock nut. When fixed under this condition, there is no need to adjust the height of brake pedal from floor and free play.

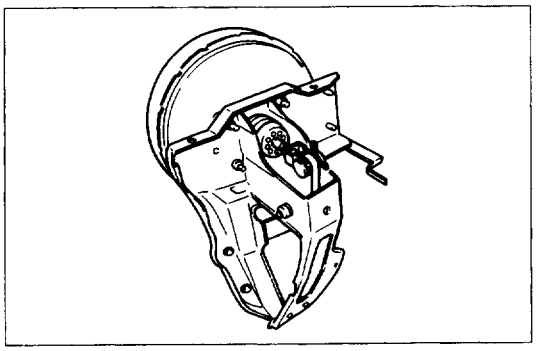

4. Install the vacuum booster to brake pedal assembly.
- Adjust the clearance between the tip of threaded portion of the stop light switch and the pedal arm to 0.5 - 1.0 mm (0.02 - 0.04 in.).
5. Tighten the vacuum booster bolts to the specified torque.

Vacuum Booster Bolt	N·m (kg·m/lb·in)
	14 (1.4 / 122)

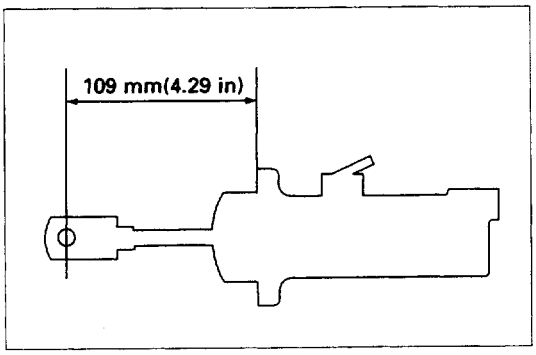

Hydromaster type:

Make necessary adjustment, so that distance between center of the clevis pin hole to the mounting surface of the master cylinder body is adjusted to 109 mm (4.29 in). Then tighten the lock nut.

When fixed under this condition, there is no need to adjust the height of brake pedal from floor and free play.

Push the brake pedal by hand to eliminate the free play between the push rod and the piston.

Under this condition, turn the stop light switch counterclockwise until the tip of the threaded portion contacts the brake pedal. Then back off the switch 1/4 - 3/4 turn.

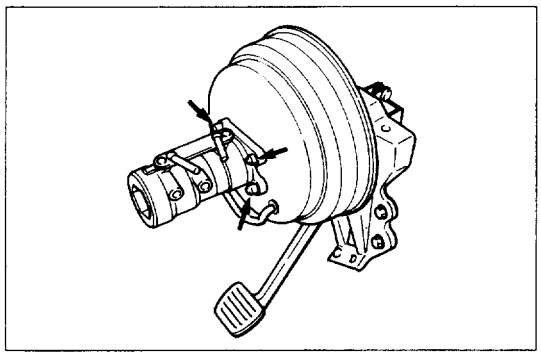

6. Install the master cylinder assembly to vacuum booster or brake pedal assembly.
7. Tighten the master cylinder nut to the specified torque.

Master Cylinder Bolt	N·m (kg·m/lb·in)
14 (1.4 / 122)	

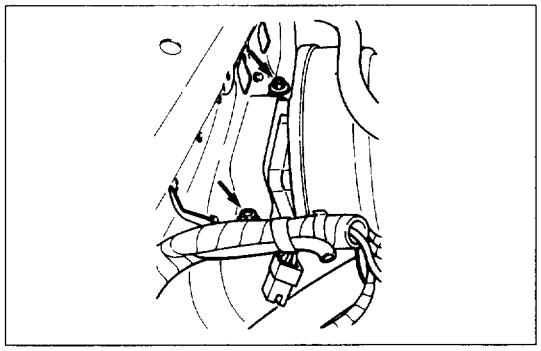

8. Install the vacuum booster and brake pedal assembly

Vacuum Booster and Brake Pedal Assembly Bolt	N·m (kg·m/lb·ft)
42 (4.3 / 32)	

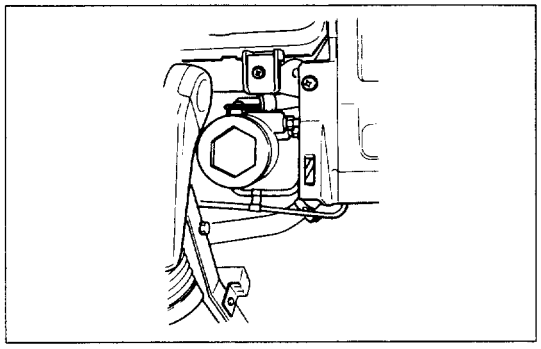

9. Connect the brake hoses and pipes.

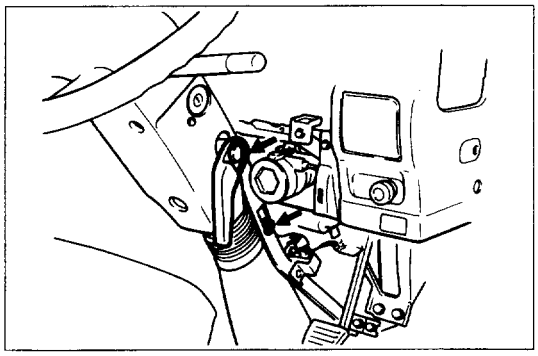

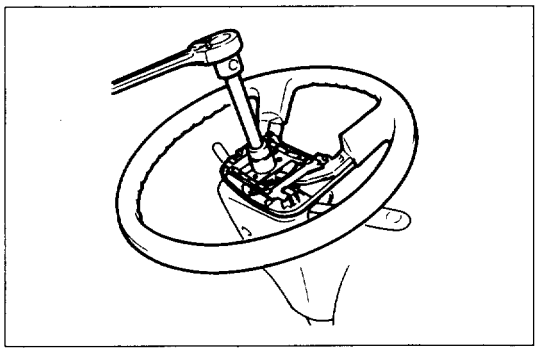

2. Steering Cowl Assembly

1. Connect the wire harness connectors.
2. Install the steering cowl

Steering Cowl Bolt	N·m (kg·m/lb·in)
14 (1.4 / 122)	

3. Install the tilt lever

Tilt Lever Bolt	N·m (kg·m/lb·ft)
45 (4.6 / 33)	

4. Steering wheel

Steering Wheel Nut	N·m (kg·m/lb·ft)
49 (5.0 / 36)	

3. Windshield Washer Tank

4. Brake and Clutch Fluid Reservoir

5. Center Duct (NPR model only)

6. Defroster Nozzle and Vent Duct

7. Stay

8. Instrument Panel

For the installation procedure for above, refer to Section 2 Frame and Cab Workshop Manual.

MASTER CYLINDER ASSEMBLY

REMOVAL

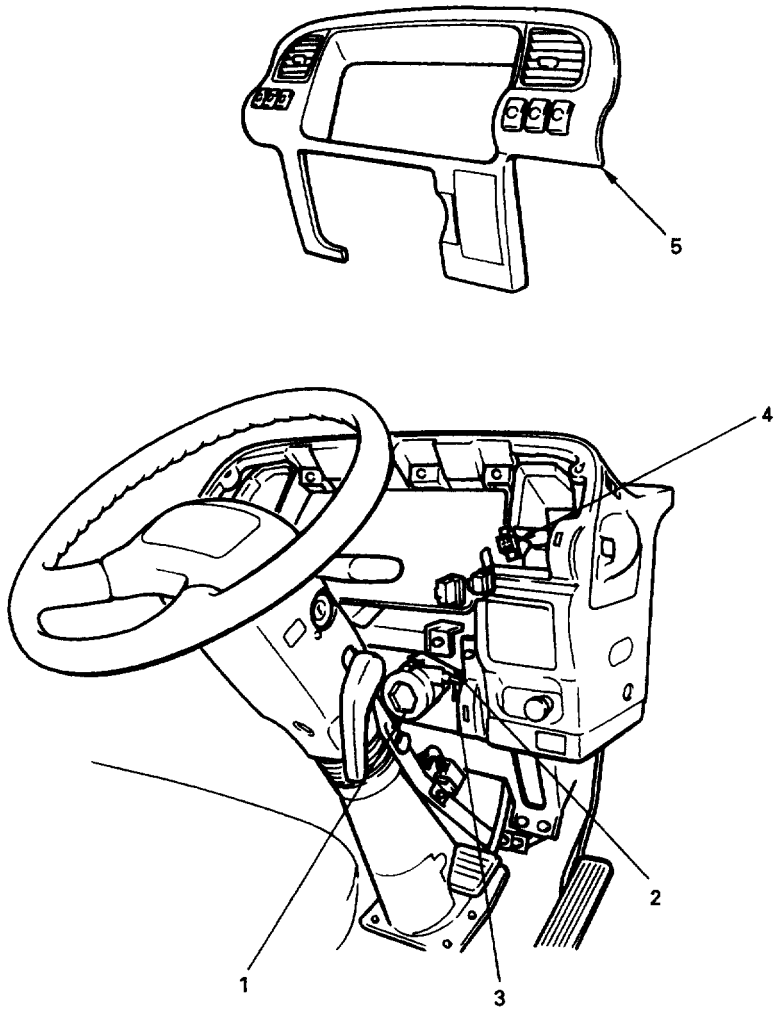

Removal Steps

1. Meter cluster
2. Switch connector
3. Brake pipe
4. Brake hose
5. Master cylinder

Removal Steps

1. **Meter Cluster**
2. **Switch connector**

   For the removal procedure for above, refer to Section 2 Frame and Cab Workshop Manual.

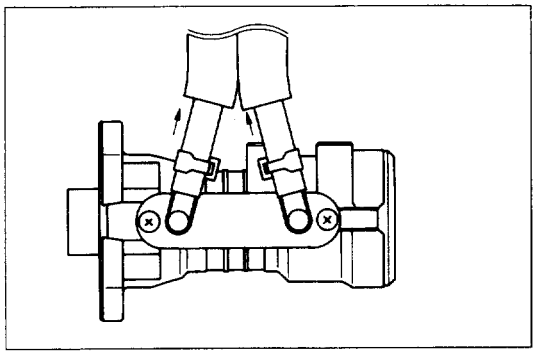

3. **Brake Pipe**
4. **Brake Hose**
   1. Disconnect the brake pipes and hoses.
   2. Plug or cover the brake rubber hoses, pipes and the master cylinder brake fluid ports to prevent brake fluid spillage.

      If brake fluid spillage occurs, wipe it up immediately.

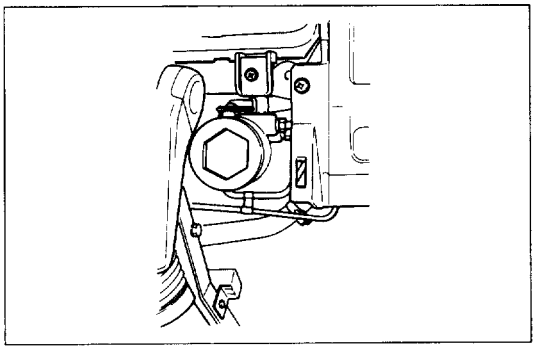

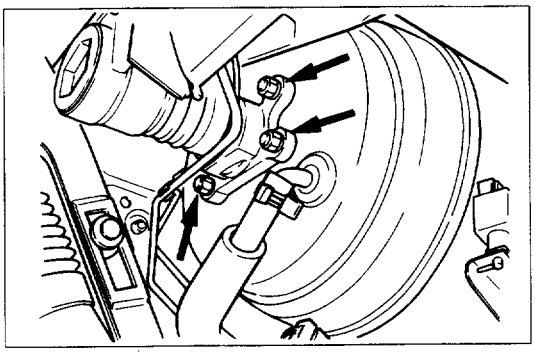

5. **Master Cylinder**

INSTALLATION

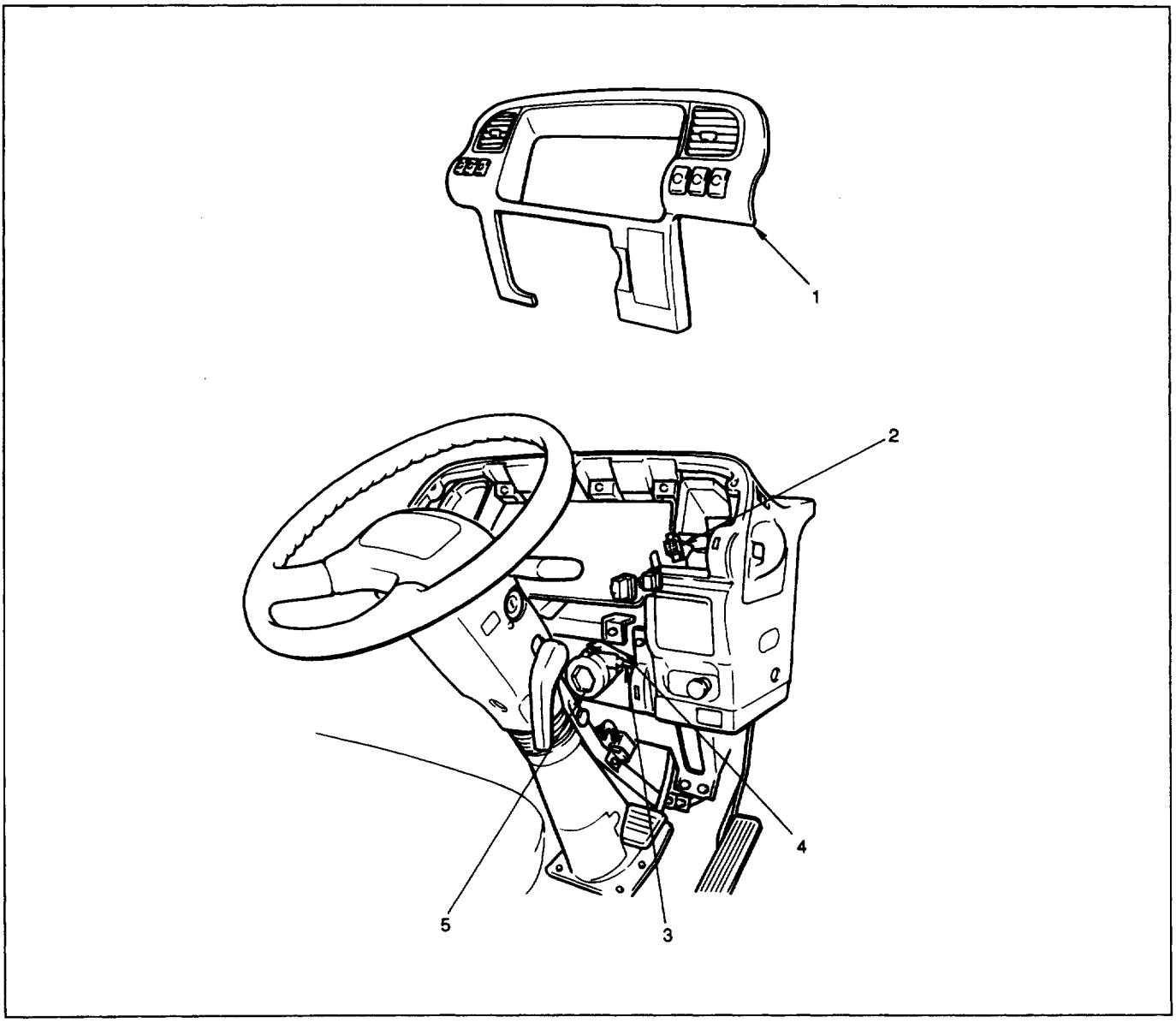

Installation Steps

1. Master cylinder
2. Brake hose
3. Brake pipe
4. Switch connector
5. Meter cluster

Installation Steps

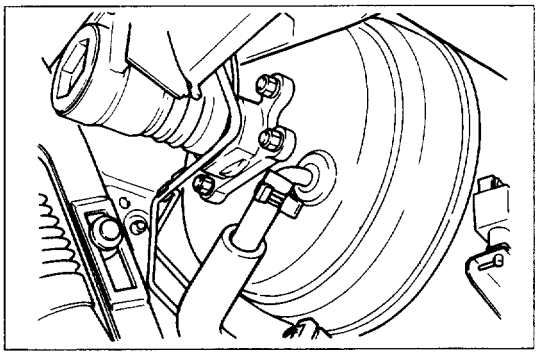

1. **Master Cylinder**
   1. Install the master cylinder assembly to the vacuum booster or brake pedal assembly.
   2. Tighten the nuts to the specified torque

   Master Cylinder Assembly

Nut Torque	N·m (kg·m/lb·in)
14 (1.4 / 122)	

2. **Brake Hose**
3. **Brake Pipe**
4. **Switch Connector**
5. **Meter Cluster**

HYDRAULIC BOOSTER AND BRAKE PEDAL ASSEMBLY

REMOVAL

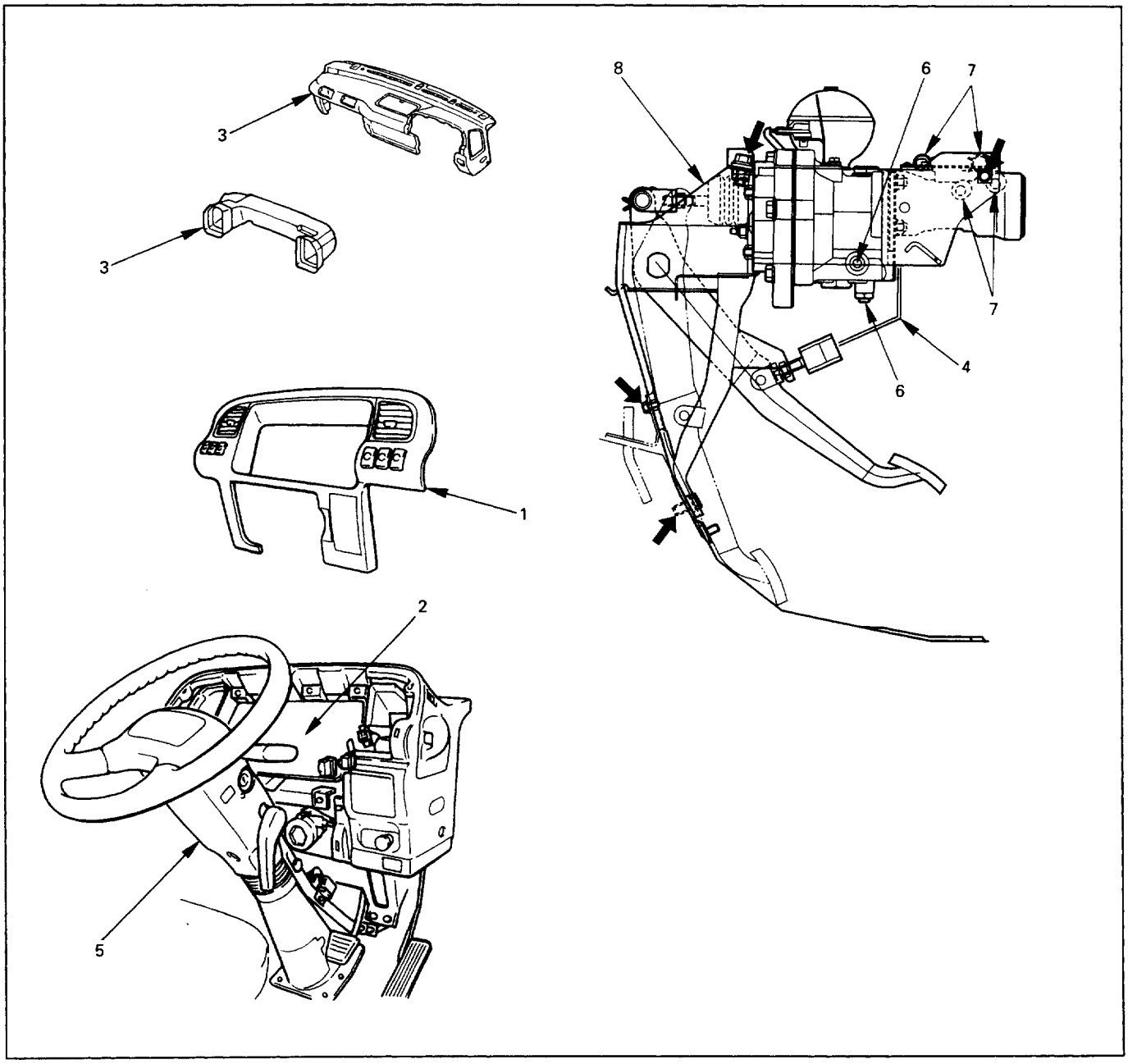

Removal Steps

1. Meter cluster
2. Meter
3. Instrument panel and duct
4. Heat protector
5. Steering wheel and column assembly
6. ATF pipe
7. Brake pipe and hose
8. Brake pedal assembly with master cylinder and hydraulic booster

Removal Steps

- Block the vehicle wheels and apply the parking brake.
- Battery ground cable.
- By brake pedal operation with the engine off, reduce the pressure of the hydraulic oil in the accumulator, and after confirming that the temperature of the hydro boost assembly has been reduced, remove the hydro boost assembly from the vehicle.

1. Remove meter cluster.
2. Remove meter assembly and harness connector.
3. Remove instrument panel assembly and ventilation duct.
4. Remove heat protector under the hydraulic booster.
5. Steering wheel and column assembly.
   - Remove inspection window and mark steering worm shaft and U-joint yoke.
     Remove key bolt and nut.
   - Remove screws: boots to floor.
   - Remove bolts and nuts: support bracket to floor.
   - Remove bolts: steering column bracket to instrument reinforcement assembly.
   - Remove bolts: steering column bracket to brake pedal bracket.
6. ATF pipe: inlet and outlet.
   - Disconnect pipes from the booster.
7. Brake pipe and hose: front and rear.
   - Disconnect pipes and hoses from the brake master cylinder.

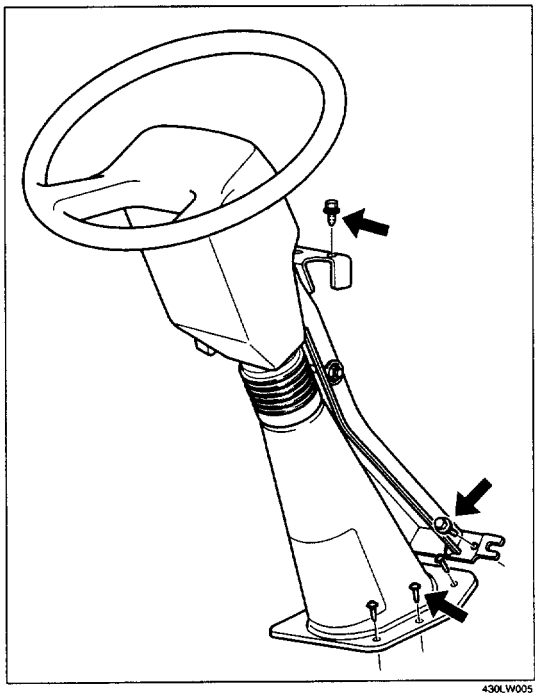

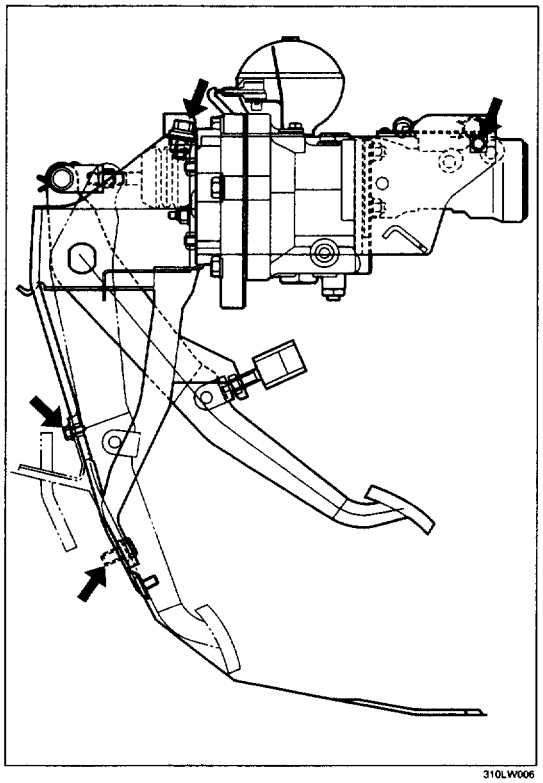

8. Brake pedal assembly with master cylinder and hydraulic booster
   - Remove accel pedal bracket.
   - Remove brake pedal assembly mounting bolts.
   - Remove radiator grille and disconnect ATF inlet pipe from flexible hose in front of the radiator. Remove ATF inlet pipe.
   - Remove brake pedal assembly.

INSTALLATION

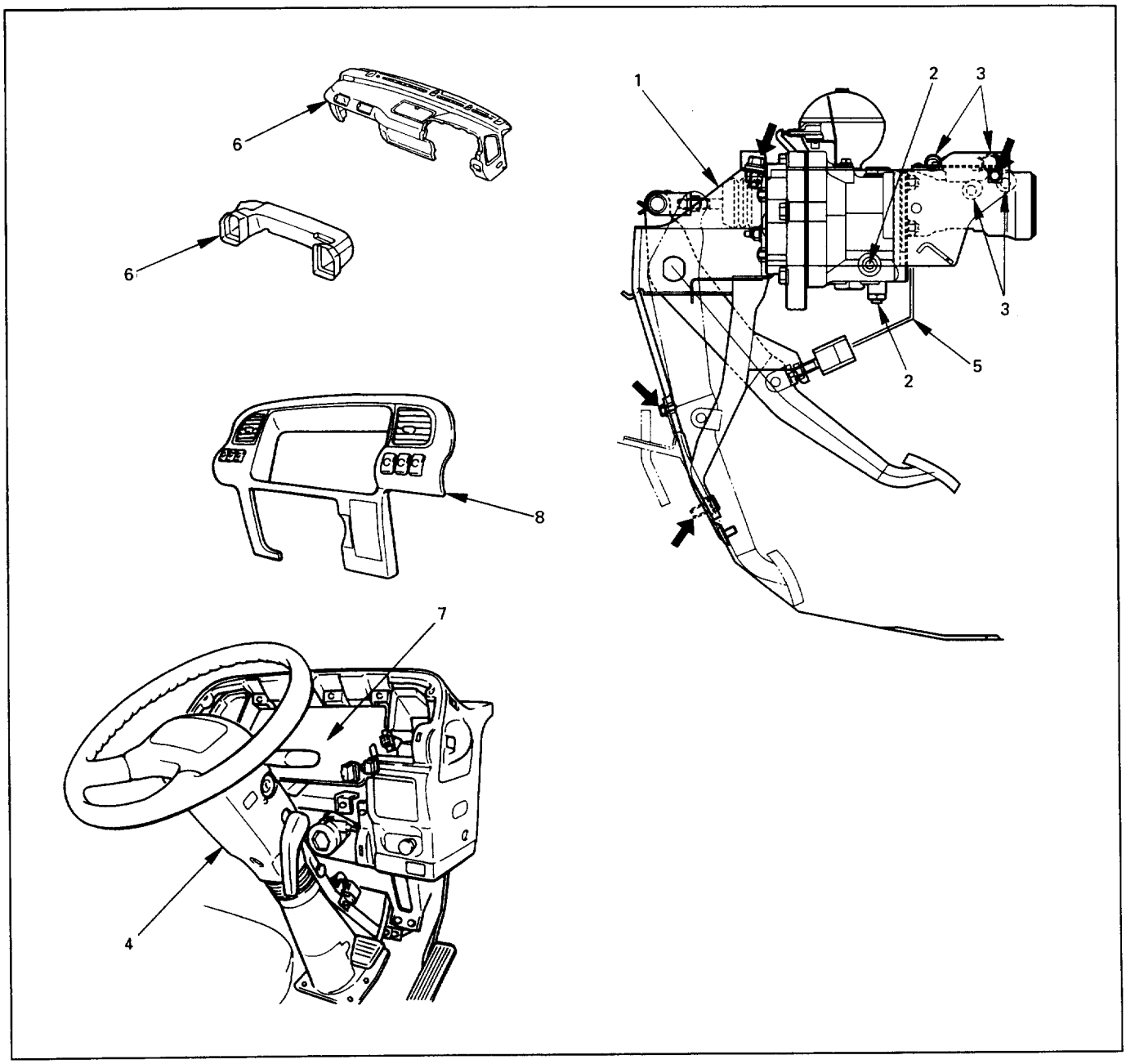

Installation Steps

1. Brake pedal assembly with master cylinder and hydraulic booster
2. ATF pipe
3. Brake pipe and hose
4. Steering wheel and column assembly
5. Heat protector
6. Instrument panel and duct
7. Meter
8. Meter cluster

Installation Steps

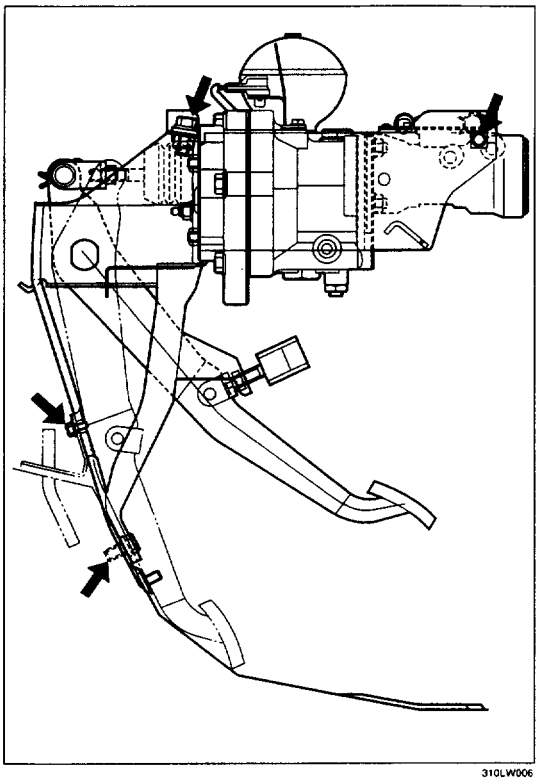
310LW006

1. **Brake Pedal Assembly with Master Cylinder and Hydraulic Booster**
   - Set ATF inlet pipe and install brake pedal assembly.

M10 mounting bolts	N·m (kg·m/lb·ft)
42 (4.3 / 32)	

   - Connect ATF inlet pipe with flexible hose.
   - Install accel pedal bracket.
   - Install radiator grille.
2. **ATF Pipe**
   - Install ATF pipes to hydraulic booster.
3. **Brake Pipe and Hose**
   - Install master cylinder hydraulic lines to master cylinder.

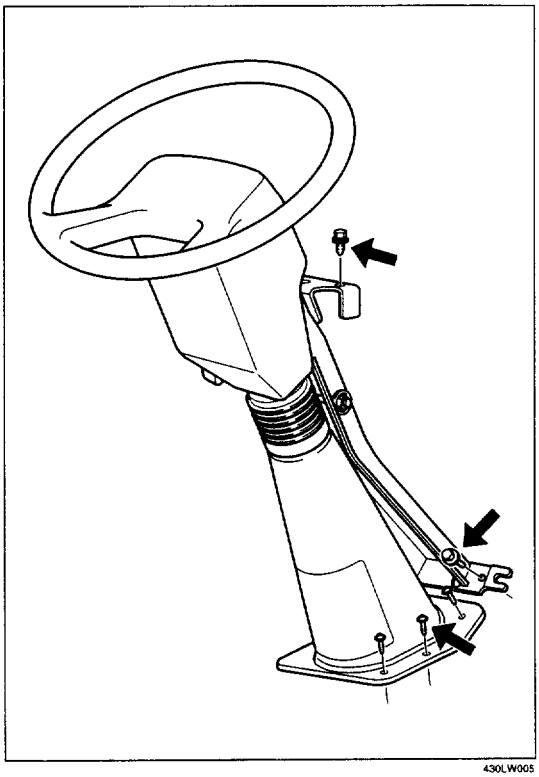
430LW005

4. **Steering Wheel and Column Assembly**
   - Set steering wheel and column assembly.
   - Install mounting bolts, nuts and screws to body.
   - Install key bolt and nut.

Key Bolt	N·m (kg·m/lb·ft)
38 (3.9 / 28)	

   - Install inspection window.
5. **Heat Protector**
   - Install hydraulic booster heat protector.
6. **Instrument Panel and Duct**
   - Install ventilation duct and instrument panel assembly.
7. **Meter**
   - Install meter assembly and harness connector.
8. **Meter Cluster**
   - Install meter cluster.
9. Battery ground cable.
10. After attaching it to the vehicle, always replenish with new hydraulic oil (Besco ATF III), and completely release the air from the hydro boost.
11. Bleed brake lines.
12. Release the parking brake and remove the wheel blocks.

HYDRAULIC BOOSTER

REMOVAL

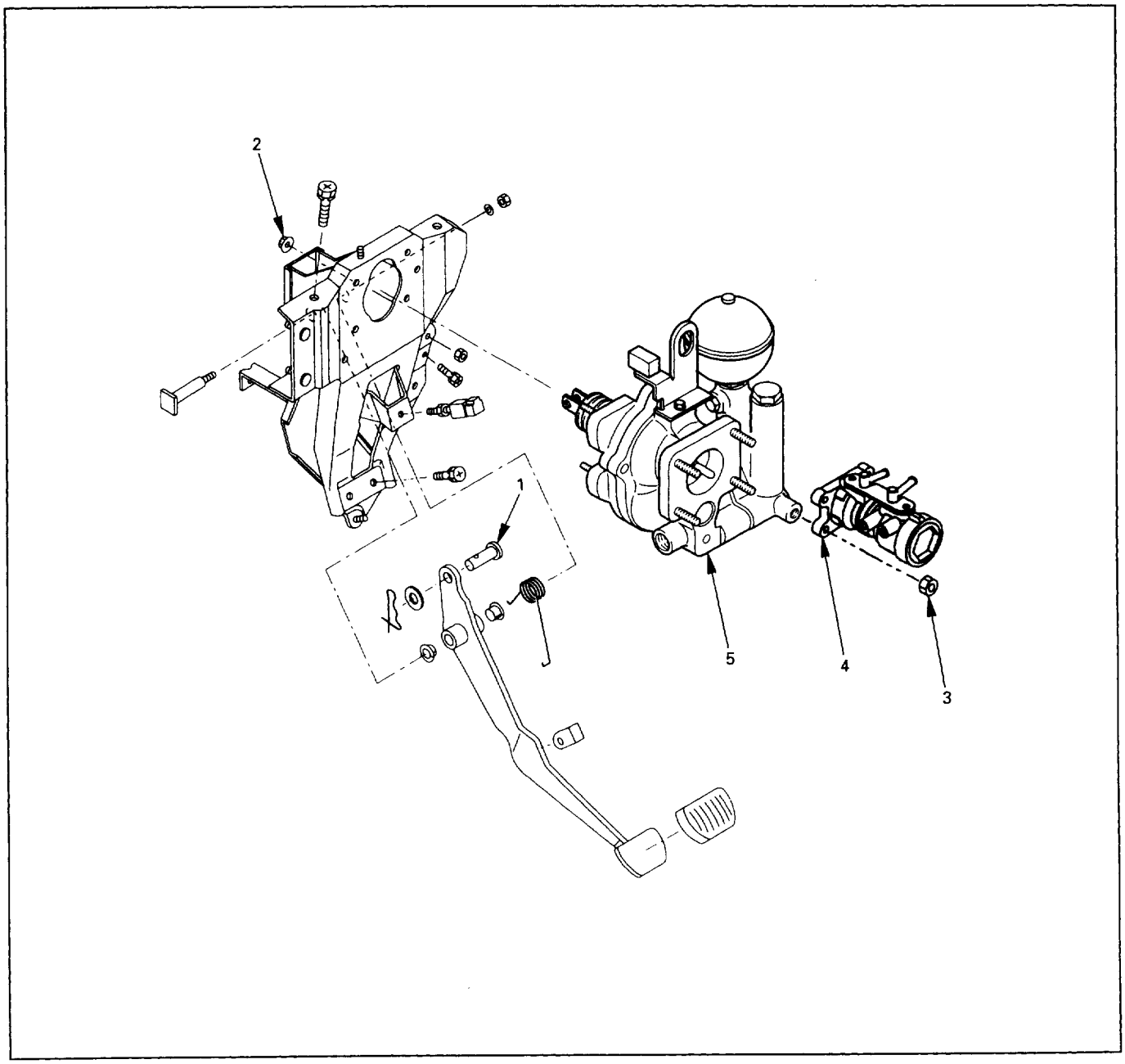

Removal Steps

1. Clevis pin
2. Hydraulic booster nut
3. Master cylinder nut
4. Master cylinder
5. Hydraulic booster

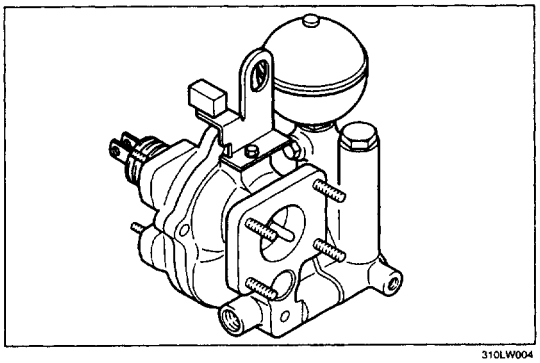

Removal Steps

1. **Clevis Pin**
2. **Hydraulic Booster Nut**
   - Four hydraulic booster mounting nuts at pedal bracket.
   - Remove master cylinder with hydraulic booster.
3. **Master Cylinder Nut**
   - Four nuts retaining master cylinder to hydraulic booster.
4. **Master Cylinder**
5. **Hydraulic Booster**

INSTALLATION

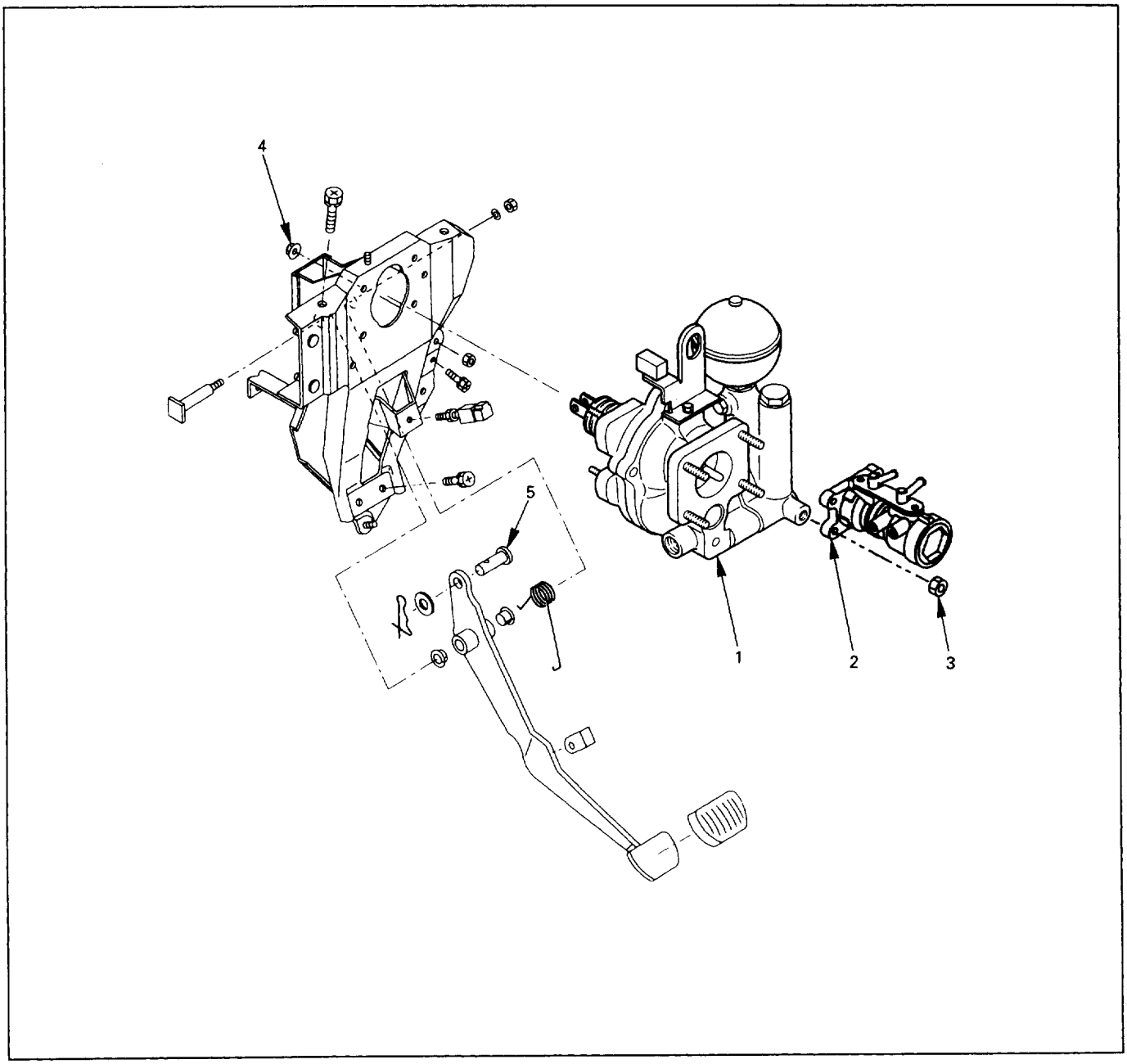

Installation Steps

1. Hydraulic booster
2. Master cylinder
3. Master cylinder nut
4. Hydraulic booster nut
5. Clevis pin

Installation Steps

1. **Hydraulic Booster**
2. **Master Cylinder Assembly**
3. **Master Cylinder Nut**

Master Cylinder Nut Torque	N·m (kg·m/lb·in)
14 (1.4 / 122)	

4. **Hydraulic Booster Nut**
   - Four hydraulic booster mounting nuts to pedal bracket.

Hydraulic Booster Nut Torque	N·m (kg·m/lb·in)
14 (1.4 / 122)	

5. **Clevis Pin**
   - Connect hydraulic booster clevis to brake pedal, and install clevis pin.

Accumulator and O-ring replacement

Removal Steps

- Block the vehicle and apply the parking brake.
- Battery ground cable.
- Reduce the pressure of the hydraulic oil in the accumulator by brake pedal operation with the engine off, and after confirming that the temperature of the hydro boost assembly has been reduced, remove the hydro boost assembly from the vehicle.
  1. Remove meter cluster.
  2. Remove meter assembly and harness connector.
  3. Remove ventilation duct.
  4. Using an oil filter wrench, remove accumulator and O-ring.

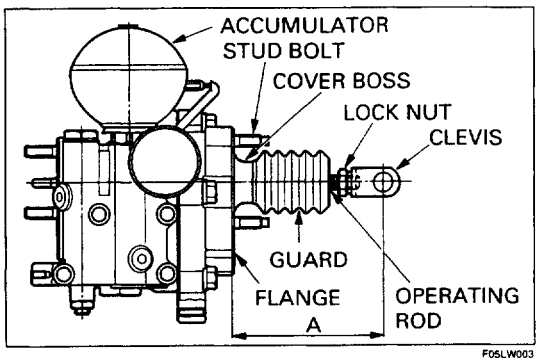

F05LW003

Installation Steps

1. Verify that there is no foreign matter adhering to the screw part of the accumulator or to the attachment part on the booster side.
2. Put an O-ring coated with new hydraulic oil (ATF DEXRON®-III) into the screw part of the accumulator, being careful not to damage it.
   Always use a new O-ring.
3. Using an oil filter wrench, hold the accumulator shell fixed, and tighten it via the wrench to the specified torque.

Accumulator	N·m (kg·m/lb·ft)
29 (3.0 / 22)	

4. Install ventilation duct.
5. Connect harness connector and install meter assembly.
6. Install meter cluster.
7. Battery ground cable.
8. After attaching it to the vehicle, always replenish with new hydraulic oil (ATF DEXRON®-III), and completely release the air from the hydro boost.
9. Release the parking brake and remove the wheel blocks.

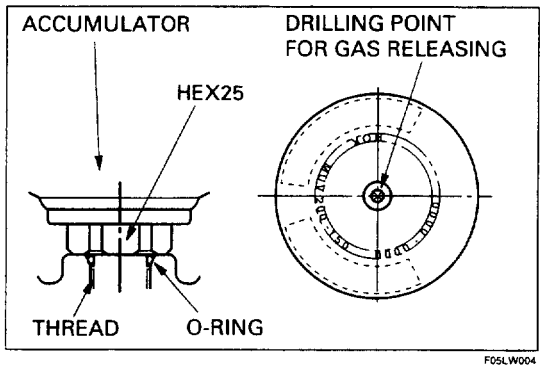

NOTE:

How to dispose of the accumulator

To dispose of the accumulator, drill a hole in the position shown in the diagram according to the indications printed on the accumulator, completely release the nitrogen gas sealed inside the accumulator, then dispose of the accumulator.

Concerning disposal with the hydro boost assembly as well, dispose of it after first letting out all the nitrogen gas inside the accumulator, by the above method.

Clevis and Lock Nut Replacement

Removal Steps

1. Remove hydraulic booster assembly.
   Refer to "Removal steps" of HYDRAULIC BOOSTER in this section.
2. Secure the hydro boost assembly to the jig using the four stud bolts on the surface of the flange for attachment to the vehicle.
3. Being careful not to exert any off-center load on the operating rod, loosen the lock nut and remove the clevis and lock nut.

Installation Steps

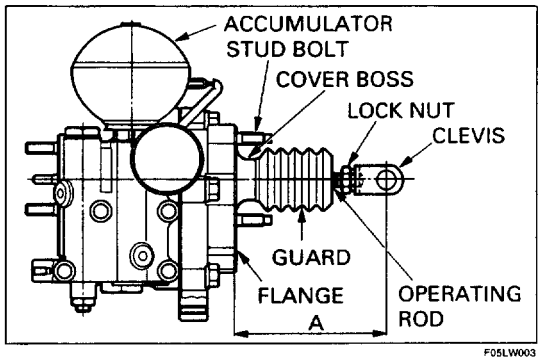

1. Screw the lock nut and then the clevis onto the operating rod.
2. Adjust so that the booster clevis position dimension (the dimension A in the diagram: the distance to the center of the clevis hole from the surface of the flange for attachment to the vehicle) is 109 ± 1 mm, and tighten the lock nut with the prescribed torque.

Prescribed tightening torque	N·m (kg·m/lb·ft)
20 (2.0 / 14)	

   When tightening the lock nut, be careful not to deform the clevis.
3. Attach the hydro boost assembly to the vehicle. Refer to "Installation Steps" of HYDRAULIC BOOSTER in this section.

Guard Replacement

Removal Steps

1. Remove hydraulic booster assembly.
   Refer to "Removal steps" of HYDRAULIC BOOSTER in this section.
2. Secure the hydro boost assembly to the jig using the four stud bolts on the surface of the flange for attachment to the vehicle.
3. Being careful not to exert any off-center load on the operating rod, loosen the lock nut and remove the clevis and lock nut.
4. Remove the guard from the cover boss anchoring groove and from the operating rod anchoring groove, and pull it out.

Installation Steps

1. With a dry cloth, clean well the cover boss anchoring groove and the operating rod anchoring groove, and verify that no foreign matter is present.
2. Insert from the large diameter hole side of the guard end-face into the operating rod outside diameter part, assemble the small diameter hole part of the guard end-face into the anchoring groove of the operating rod, then assemble the large diameter hole part securely into the anchoring groove of the boss of the cover.
3. Screw the lock nut and then the clevis onto the operating rod.
4. Adjust so that the booster clevis position dimension (the dimension A in the diagram: the distance to the center of the clevis hole from the surface of the flange for attachment to the vehicle) is 109 ± 1 mm, and tighten the lock nut with the prescribed torque. When tightening the lock nut, be careful not to deform the clevis.

Prescribed tightening torque	N·m (kg·m/lb·ft)
20 (2.0 / 14)	

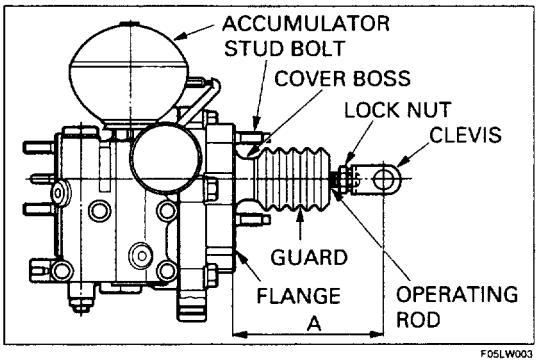

5. Attach the hydro boost assembly to the vehicle. Refer to "Installation Steps" of HYDRAULIC BOOSTER in this section.

LOAD SENSING PROPORTIONING VALVE

REMOVAL

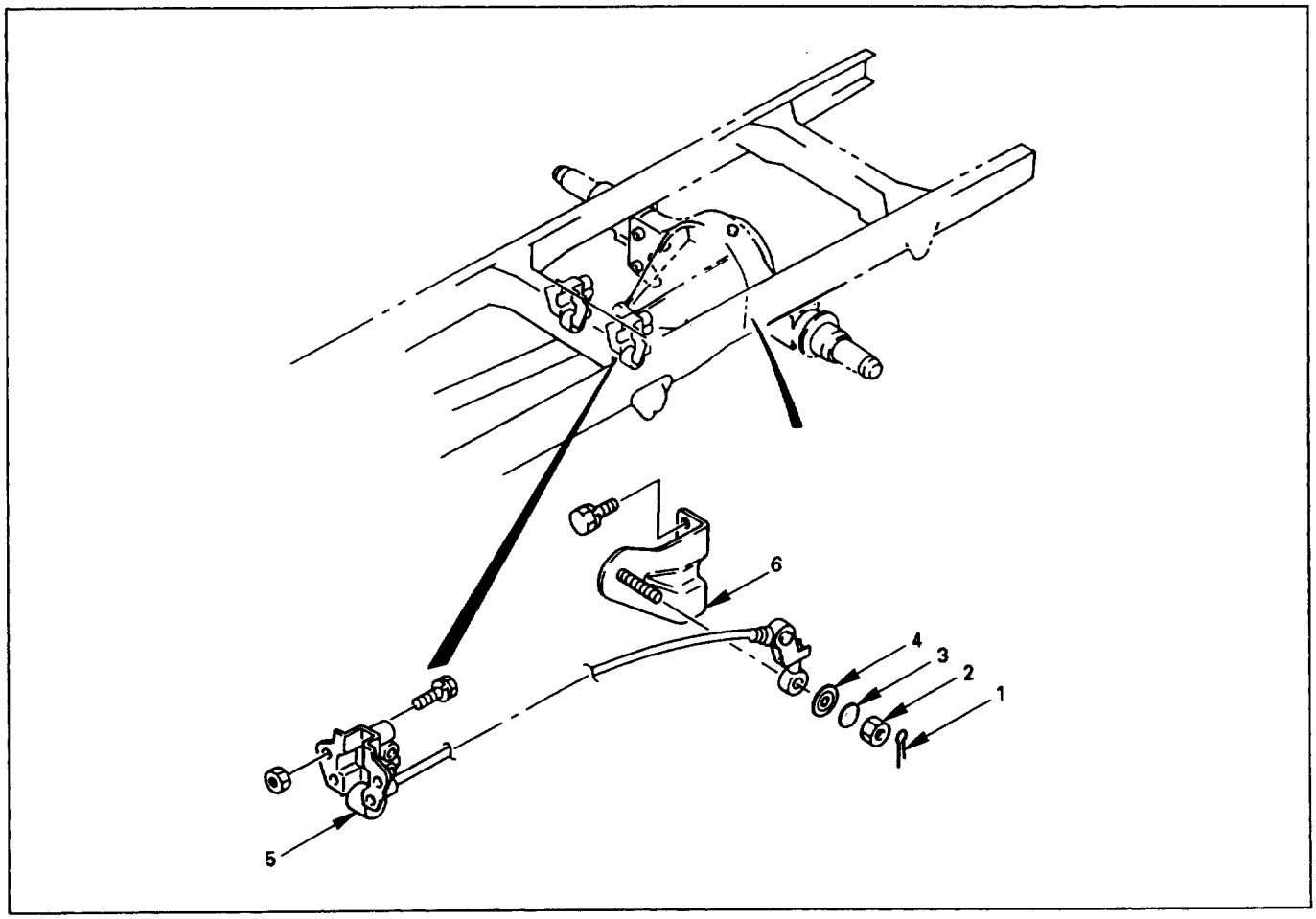

Removal Steps

1. Cotter pin
2. Nut
3. Washer
4. Retainer
5. Load sensing proportioning valve
6. Bracket

Removal Steps

1. Cotter Pin
2. Nut
3. Washer
4. Retainer
5. Load Sensing Proportioning Valve
6. Bracket

INSTALLATION

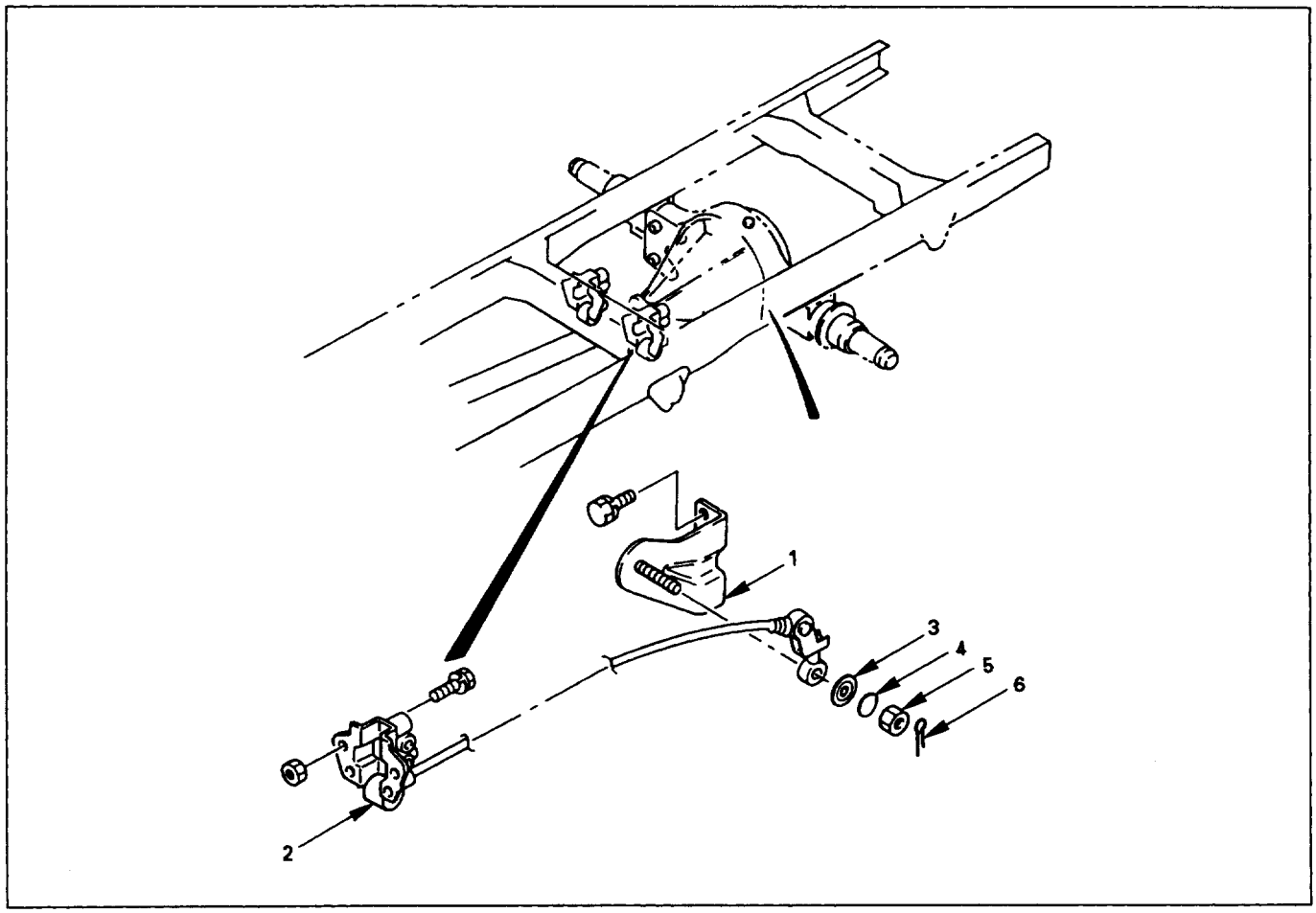

Installation Steps

1. Bracket
2. Load sensing proportioning valve
3. Retainer
4. Washer
5. Nut
6. Cotter pin

Installation Steps

To install, follow the removal steps in the reverse order.

LOAD SENSING PROPORTIONING VALVE (L.S.V.) ADJUSTMENT

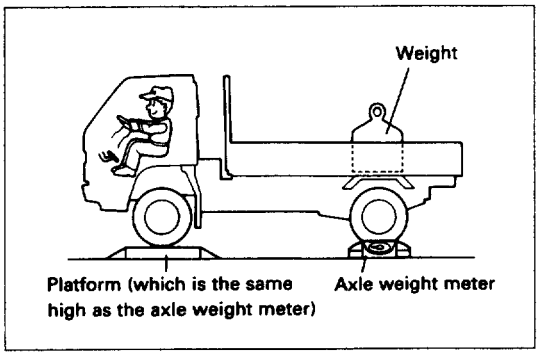

1. Fluid Pressure Measurement

1) Rear axle weight adjustment

With an axle weight meter, adjust the rear axle weight with a person sitting in the driver's seat and a weight loaded in the rear body.

N (kg/lb)

Adjustment value	Ⓐ

For Ⓐ refer to the adjustment standard table on page 5A-91.

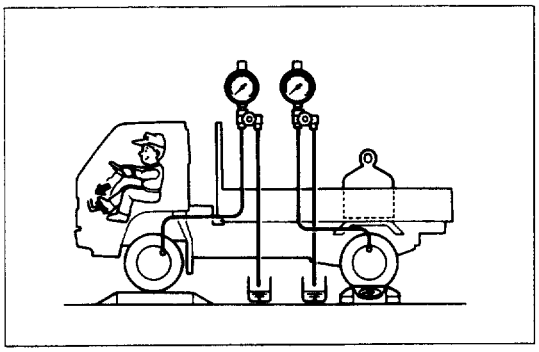

2) Installation of a fluid pressure gauge

Remove the air bleeder of the left hand wheel front and rear brakes. Bleed air out of the fluid pressure gauge with the measurement hose of the fluid pressure gauge installed.

Pressure Tester: Brake oil (Fluid pressure gauge)
5-8840-2190-0

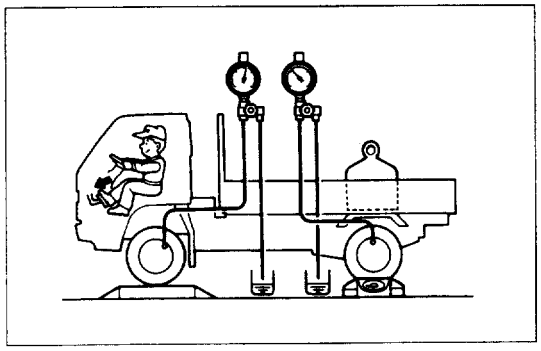

3) Rear wheel cylinder fluid pressure measurement

Step on the brake pedal until the fluid pressure of the front wheel cylinder gets to 80 kg/cm^2 (7845 kpa), and check the rear wheel cylinder fluid pressure. (Read the value of the front wheel cylinder fluid pressure 2 seconds after the measurement. When measuring the L.S.V fluid pressure, keep the brake pedal pressed down without stepping it down twice or releasing it.)

Rear Wheel Cylinder Fluid Pressure kpa (kg/cm^2)

Standard	Ⓑ

For Ⓑ refer to the adjustment standard table on page 5A-91.

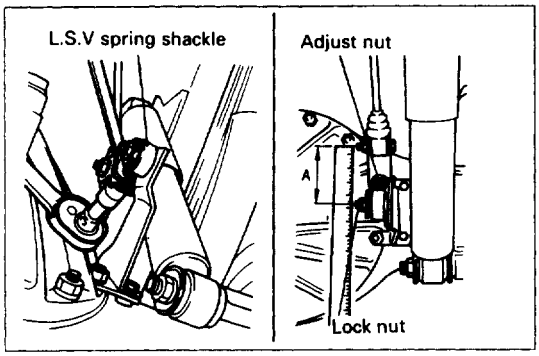

2. Oil Pressure Adjustment

1) L.S.V spring shackle adjustment

Loosen the adjust nut of the L.S.V spring shackle, and adjust the length of the L.S.V spring shackle. When the oil pressure is insufficient, turn the adjust nut clockwise to extend the span "A". When the oil pressure is too high, turn the adjust nut counterclockwise to reduce the span "A".

mm (in)

Item	Span adjusted
Standard of span "A"	78 (3.07)
Range adjustable	72 – 84 (2.83 – 3.31)

After adjustment, tighten the lock nut securely and install the cotter pin.

Lock Nut Torque	N·m (kg·m/lb·in)
Max. 10 (1.0 / 87)	

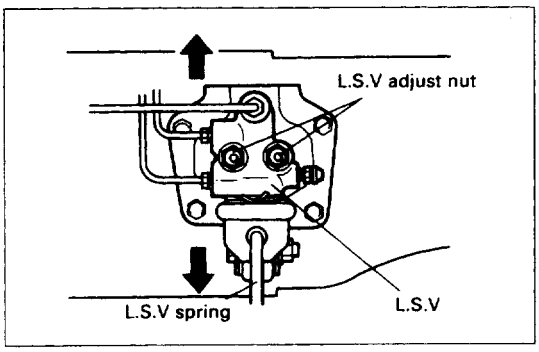

2) L.S.V adjustment

When the adjustment cannot be done with the L.S.V spring shackle, loosen the L.S.V adjust nut (2 pcs.) and adjust the oil pressure to the standard value by sliding the L.S.V up and down. After the L.S.V adjustment, readjust the length of the L.S.V spring shackle.

L.S.V Adjust Nut Torque	N·m (kg·m/lb·in)
13 (1.3 113)	

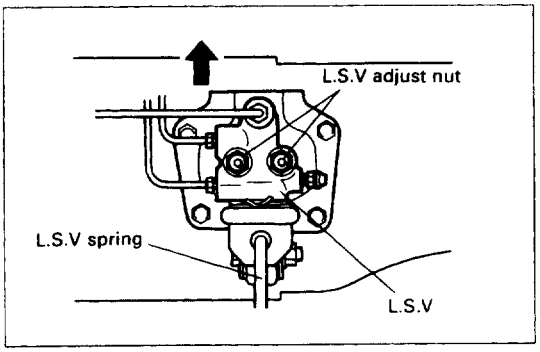

3. Unit Inspection of L.S.V

1) Loosen the L.S.V adjust nut (2 pcs.). And then lift the L.S.V up fully and tighten it up tentatively so that the L.S.V spring will not move.

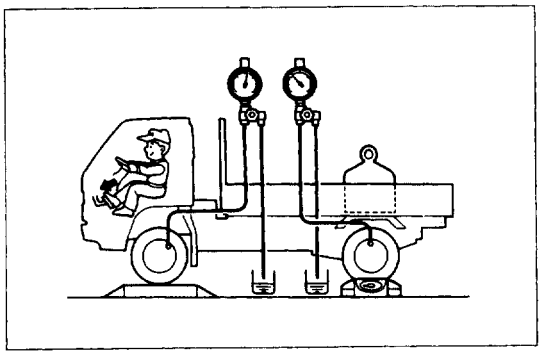

2) Under the same conditions as 1) above, check the rear wheel cylinder fluid pressure.

Standard	
Master cylinder fluid pressure kPa(kg/cm^2)	Rear fluid pressure kPa(kg/cm^2)
2942 (30)	Ⓒ
7845 (80)	Ⓓ

For Ⓒ and Ⓓ refer to the adjustment standard table on page 5A-91.

Load Sensing Proportioning Valve Adjustment Standard Table

Models	Ⓐ kg	Ⓑ kg/cm²	Ⓒ kg/cm²	Ⓓ kg/cm²
NKR69EAL–1DXYE	1000	37.6±6	14.7±2	19.7±3.5
NKR69LL –5DXYE	1000	37.6±6	14.7±2	19.7±3.5
NKR69LL –5HXYE	1000	37.6±6	14.7±2	19.7±3.5
NPR69LU –5DXYE	1000	37.6±6	14.7±2	19.7±3.5
NPR69LL –5DXYE	1000	37.6±6	14.7±2	19.7±3.5
NPR69LU –5HXYE	1000	51.3±6	17.3±2	29.8±3.5
NPR69LL –5HXYE	1000	51.3±6	17.3±2	29.8±3.5
NPR65LU –5JXYEJ	1500	51.3±6	17.3±2	29.8±3.5
NPR65PL –5JXYEJ	1500	51.3±6	17.3±2	29.8±3.5
NPR66LU –5JXYHT	1300	51.3±6	17.3±2	29.8±3.5
NKR58EU –3EXYH	700	37.6±6	14.7±2	19.7±3.5
NKR58EU –1EXYH	700	37.6±6	14.7±2	19.7±3.5
NKR58E2U–5EXYH	700	37.6±6	14.7±2	19.7±3.5
NPR58GU –5EXYH	1100	51.3±6	17.3±2	29.8±3.5
NPR58LU –5EXYH	1100	51.3±6	17.3±2	29.8±3.5
NPR58LU –5HWYH	1100	51.3±6	17.3±2	29.8±3.5
NPR66LU –5JXYH	1100	51.3±6	17.3±2	29.8±3.5
NPR58LU –5JXYH	1100	51.3±6	17.3±2	29.8±3.5
NPR99LU –5JXYZ	900	51.3±6	17.3±2	29.8±3.5
NPR99PU –5JXYZ	900	51.3±6	17.3±2	29.8±3.5
NPR99PU –5LXYZ	1300	51.3±6	17.3±2	29.8±3.5
NPR59PU –5LXYHJ	1300	51.3±6	17.3±2	29.8±3.5
NPR66LU –5LXYH	1300	51.3±6	17.3±2	29.8±3.5
NPR66PU –5LXYH	1300	51.3±6	17.3±2	29.8±3.5
NPS66LU –5JXYH	1800	51.3±6	17.3±2	29.8±3.5

Deceleration Sensing Proportioning Valve

DSPV Mounting Angle

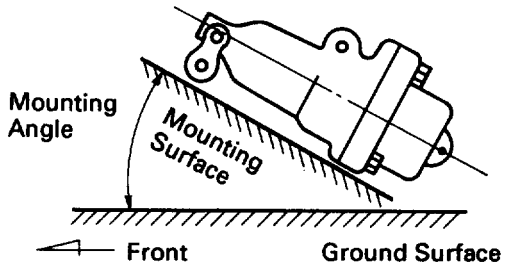

Models			Mounting Angle
NHR	Front Disc Brake		12° 00′ ±45′
	Front Drum Brake	Flat-low Model	12° 00′ ±45′
		Except Flat-low Model	9° 30′ ±45′
NKR			12° 30′ ±45′

Conduct the following inspections, and if any abnormality is found, replace.

Condition	Procedure	Judgement
As installed in the vehicle	Measure braking force to make sure of normality.	If no braking force, adherence of ball (deceleration sensing) to seal is suspected.
	Bleed air also from the DSPV side of breather.	If no brake fluid does not come out, the same trouble as above is suspected.
	Check fluid leakage.	No problem, if there is no leak.
	Check mounting angle. (Refer to the table.)	If installed at an abnormal angle, though rare, specified braking force is unobtainable or DSPV does not work.
As not installed in the vehicle	Incling DSPV back and forth to see if the ball moves insides.	No problem, if a ball sound is heard from within.

UNIT REPAIR

WHEEL CYLINDER ASSEMBLY

DISASSEMBLY

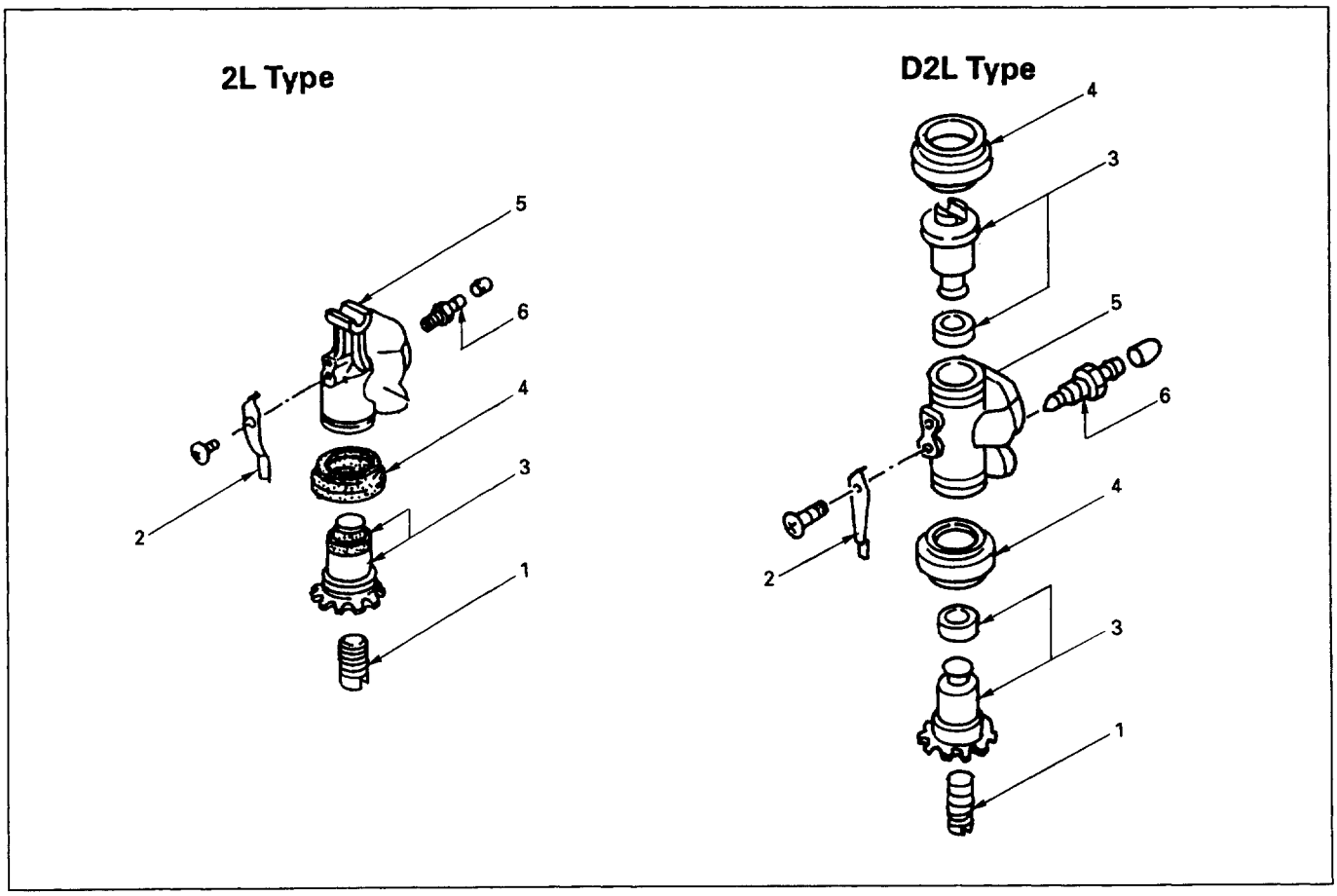

Disassembly Steps

1. Adjusting screw
2. Lock plate
3. Piston assembly
4. Boot
5. Wheel cylinder body
6. Bleeder screw

Disassembly Steps

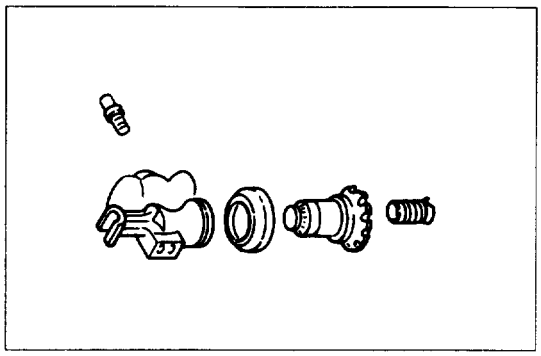

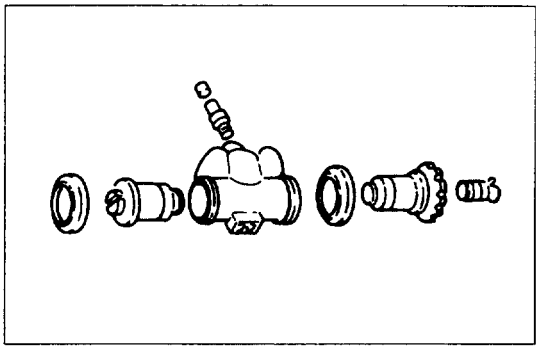

1. **Adjusting Screw**
2. **Lock Plate**
3. **Piston Assembly**
4. **Boot**
5. **Wheel Cylinder Body**
6. **Bleeder Screw**

   Store all of the removal parts in a clean part tray.

INSPECTION AND REPAIR

Make the necessary adjustments, repairs, and part replacements if excessive wear or damage is discovered during inspection.

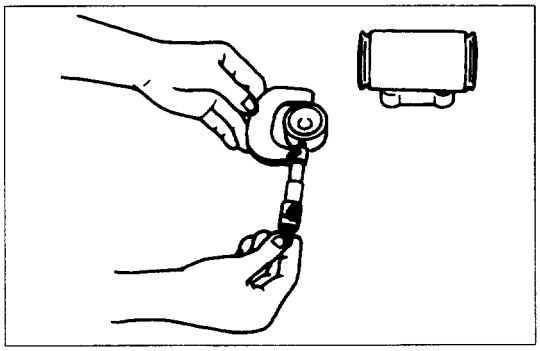

Wheel Cylinder Assembly

Wheel Cylinder and Piston Clearance

1. Use a micrometer to measure the piston diameter,
2. Use an inside dial indicator to measure the cylinder bore.
3. Calculate the clearance between the wheel cylinder and the piston.

   If the clearance exceeds the specified limit, the piston and/or wheel cylinder body must be replaced.

Wheel Cylinder and Piston Clearance — mm (in)

Wheel Cylinder size	Limit
26.99 (1.063)	0.15 (0.006)
28.57 (1.125)	
30.16 (1.188)	
34.93 (1.375)	

When the wheel cylinder disassembled, the repair kit (piston cup and boot) must be replaced.

REASSEMBLY

Wheel Cylinder Assembly

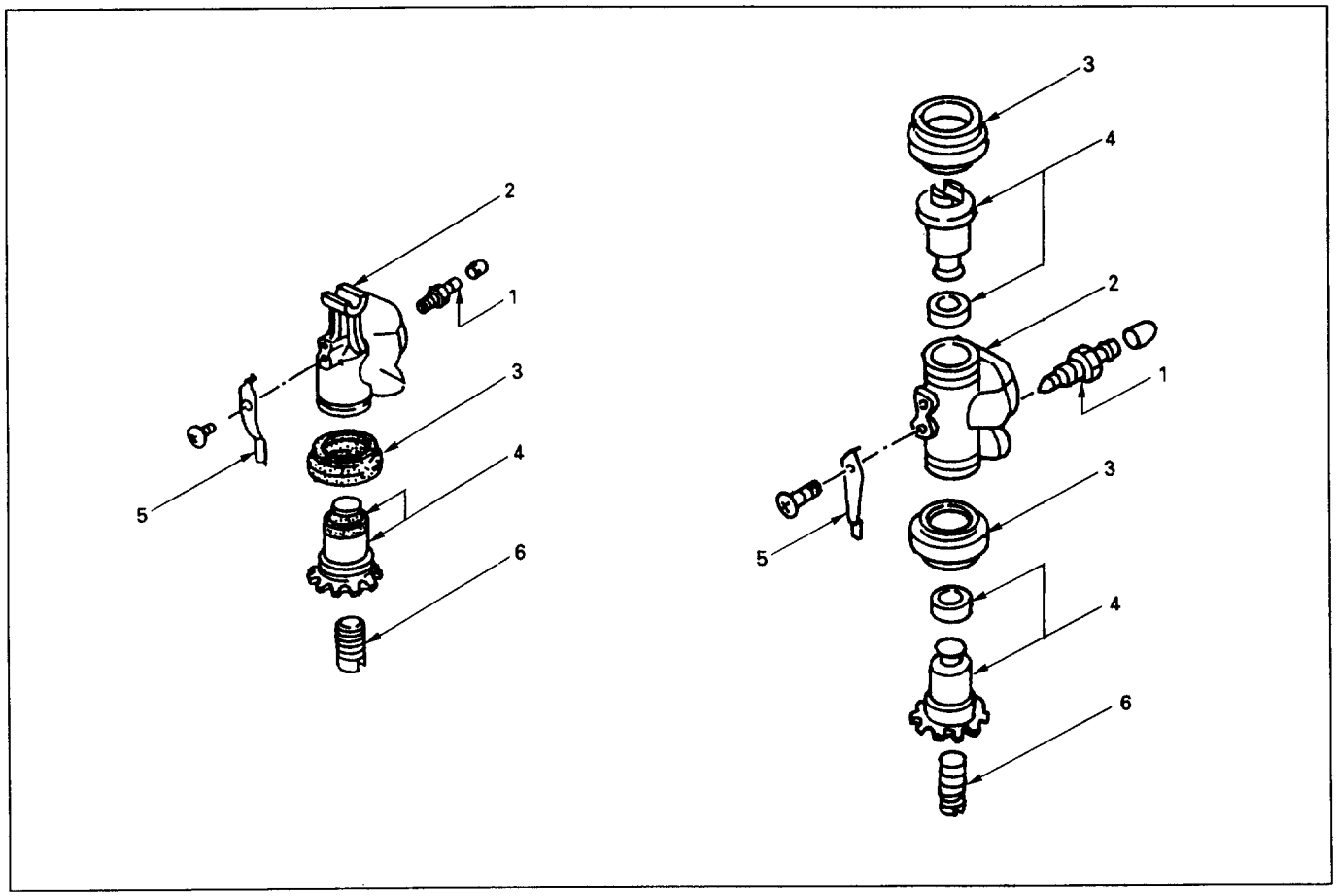

Reassembly Steps

1. Bleeder screw
2. Wheel cylinder body
3. Boot
4. Piston assembly
5. Lock plate
6. Adjusting screw

Reassembly Steps

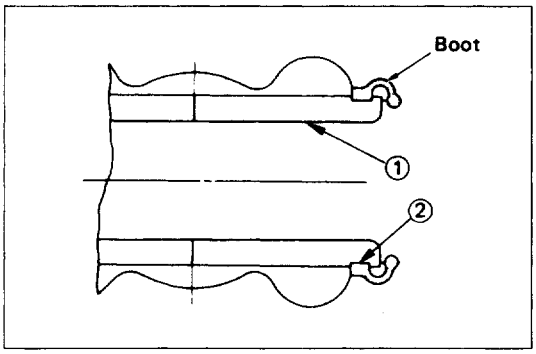

1. **Bleeder Screw**
2. **Wheel Cylinder Body**
   1. Apply a coat of rubber grease to the cylinder body bore ① and the grooves for the boots ②.
   2. Fit the boot edge securely into the mating groove of the cylinder body.

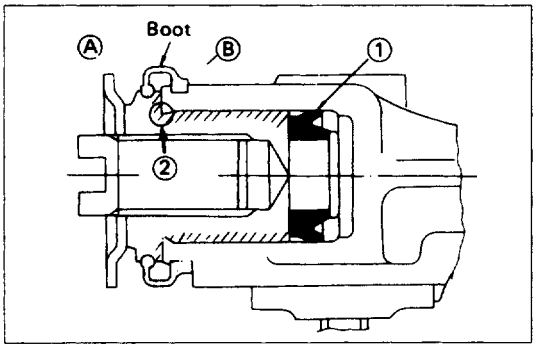

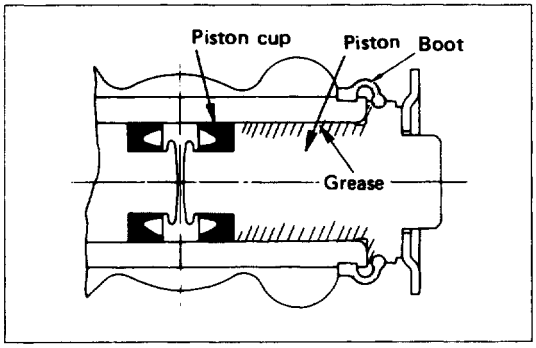

3. **Boot**
4. **Piston Assembly**
   1. Apply a coat of rubber grease to the piston cups and the pistons.

      Be sure to lubricate the entire cylinder body bore with the rubber grease.
   2. Install the piston assembly to the cylinder.

   NOTE:

   After installation of the piston assembly into the cylinder body bore, fit the boot edge securely into the mating groove of the piston.

   Make sure that the two boot edges firmly sealed into the grooves.

   Be careful not to damage the piston cups and the boots.

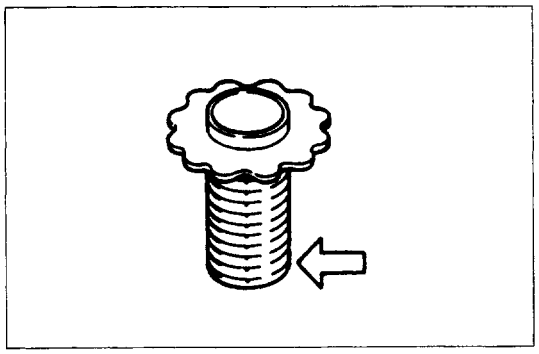

5. **Lock Plate**
6. **Adjusting Screw**

   Apply a coat of molybdenum disulfide grease to the adjusting screw slit and threads.

WHEEL CYLINDER ASSEMBLY (WITHOUT AUTO-ADJUSTER)

DISASSEMBLY

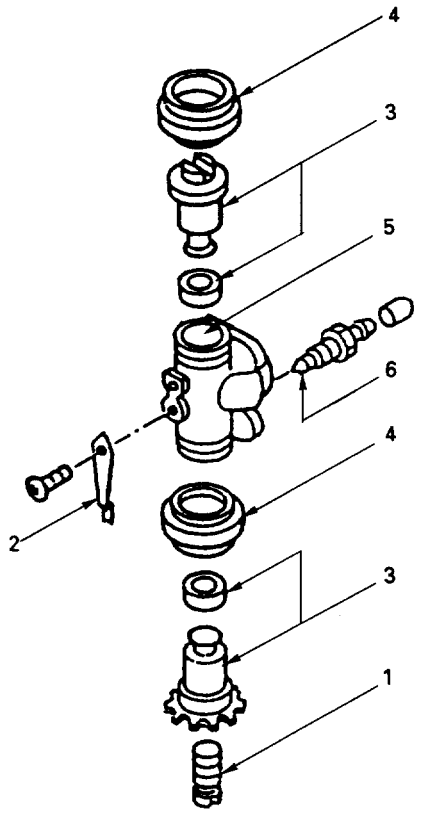

Disassembly Steps

1. Adjusting screw
2. Lock plate
3. Piston assembly
4. Boot
5. Wheel cylinder body
6. Bleeder screw

Disassembly Steps

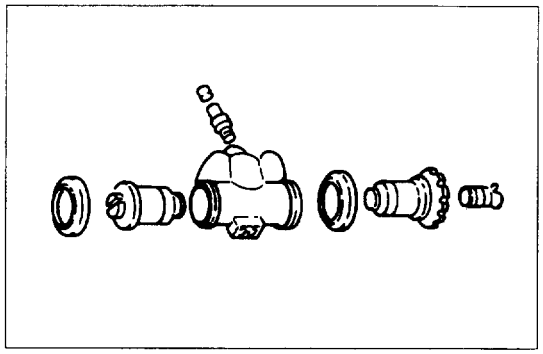

1. **Adjusting Screw**
2. **Lock Plate**
3. **Piston Assembly**
4. **Boot**
5. **Wheel Cylinder Body**
6. **Bleeder Screw**

   Store all of the removal parts in a clean part tray.

INSPECTION AND REPAIR

Make the necessary adjustments, repairs, and part replacements if excessive wear or damage is discovered during inspection.

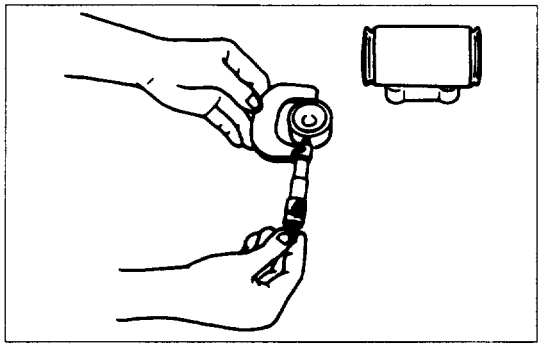

Wheel Cylinder Assembly

Wheel Cylinder and Piston Clearance

1. Use a micrometer to measure the piston diameter,
2. Use an inside dial indicator to measure the cylinder bore.
3. Calculate the clearance between the wheel cylinder and the piston.

   If the clearance exceeds the specified limit, the piston and/or wheel cylinder body must be replaced.

Wheel Cylinder and Piston Clearance mm (in)

Wheel Cylinder size	Limit
22.22 (0.875) 25.40 (1.000) 30.16 (1.188) 33.33 (1.312)	0.15 (0.006)

When the wheel cylinder disassembled, the repair kit (piston cup and boot) must be replaced.

REASSEMBLY

Wheel Cylinder Assembly (Without Auto-adjuster)

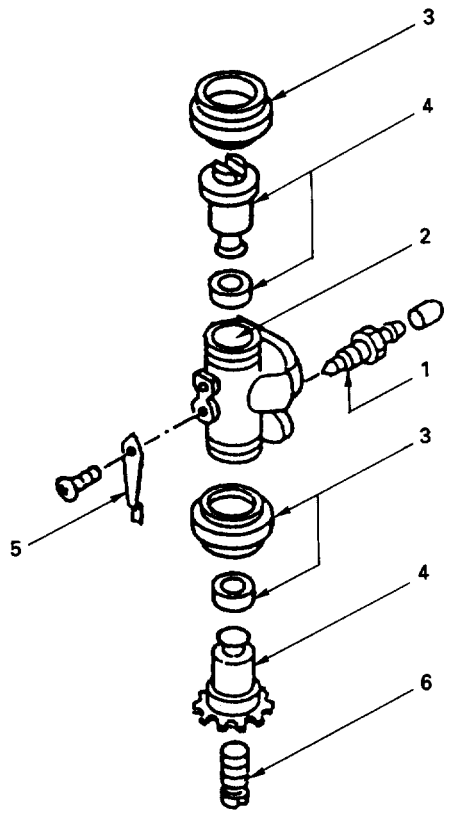

Reassembly Steps

1. Bleeder screw
2. Wheel cylinder body
3. Boot
4. Piston assembly
5. Lock plate
6. Adjusting screw

Reassembly Steps

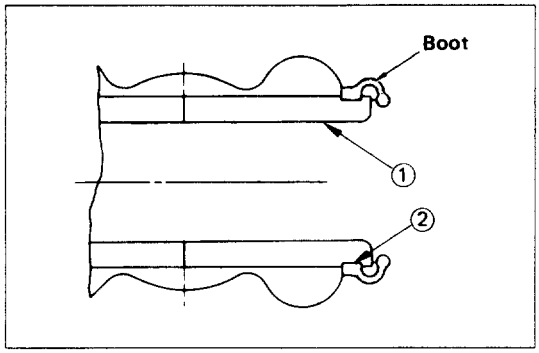

1. **Bleeder Screw**
2. **Wheel Cylinder Body**
   1. Apply a coat of rubber grease to the cylinder body bore ① and the grooves for the boots ②.
   2. Fit the boot edge securely into the mating groove of the cylinder body.

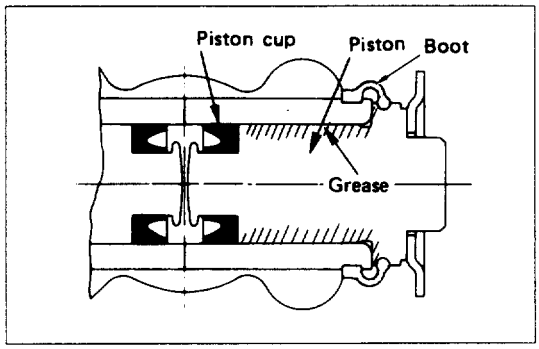

3. **Boot**
4. **Piston Assembly**
   1. Apply a coat of rubber grease to the piston cups and the pistons.

      Be sure to lubricate the entire cylinder body bore with the rubber grease.
   2. Install the piston assembly to the cylinder.

   NOTE:

   After installation of the piston assembly into the cylinder body bore, fit the boot edge securely into the mating groove of the piston.

   Make sure that the two boot edges firmly sealed into the grooves.

   Be careful not to damage the piston cups and the boots.

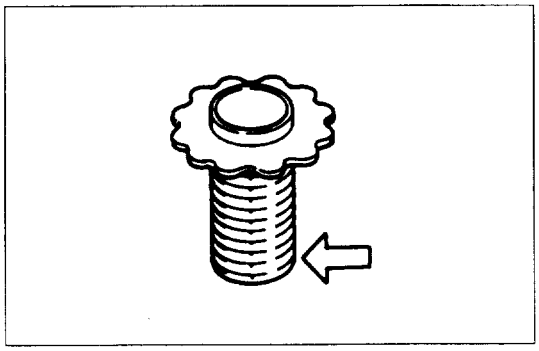

5. **Lock Plate**
6. **Adjusting Screw**

   Apply a coat of molybdenum disulfide grease to the adjusting screw slit and threads.

WHEEL CYLINDER ASSEMBLY (WITH AUTO-ADJUSTER)

DISASSEMBLY

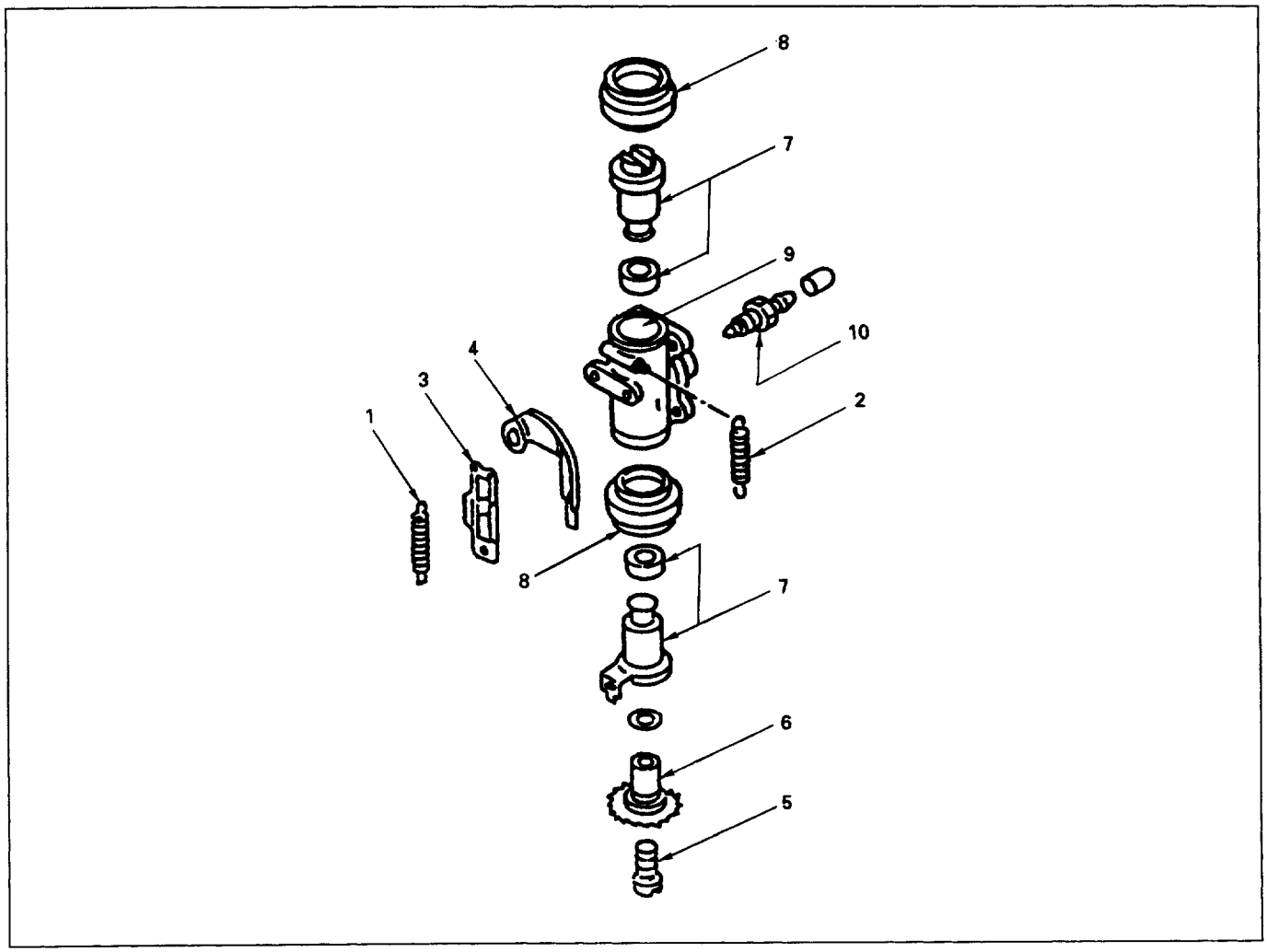

Disassembly Steps

1. Overtravel spring
2. Return spring
3. Fitting
4. Adjuster lever
5. Adjusting screw
6. Adjuster gear
7. Piston assembly
8. Boot
9. Wheel cylinder body
10. Bleeder screw

Disassembly Steps

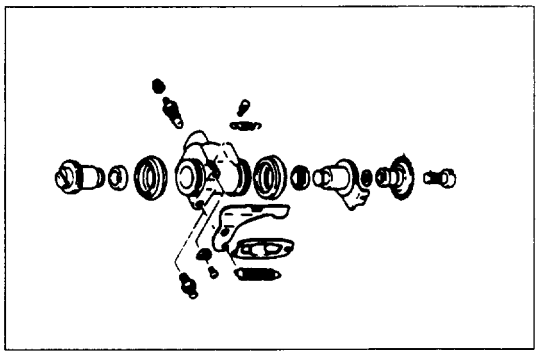

1. **Overtravel Spring**
2. **Return Spring**
3. **Fitting**
4. **Adjuster Lever**
5. **Adjusting Screw**
6. **Adjuster Gear**
7. **Piston Assembly**
8. **Boot**
9. **Wheel Cylinder Body**
10. **Bleeder Screw**

Store all of the removed parts in a clean part tray.

INSPECTION AND REPAIR

Make the necessary adjustments, repairs, and part replacements if excessive wear or damage is discovered during inspection.

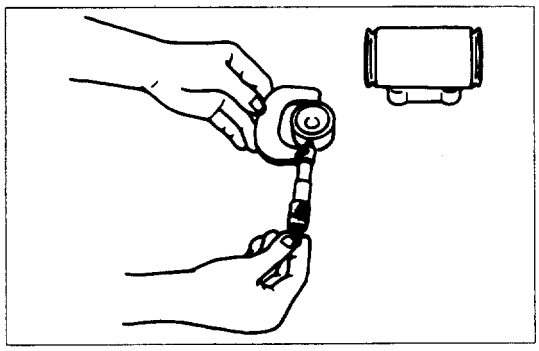

Wheel Cylinder Assembly

Wheel Cylinder and Piston Clearance

1. Use a micrometer to measure the piston diameter,
2. Use an inside dial indicator to measure the cylinder bore.
3. Calculate the clearance between the wheel cylinder and the piston.

   If the clearance exceeds the specified limit, the piston and/or wheel cylinder body must be replaced.

Wheel Cylinder and Piston Clearance mm (in)

Wheel Cylinder size	Limit
22.2 (0.875) 25.4 (1.000)	0.15 (0.006)

When the wheel cylinder disassembled, the repair kit (piston cup and boot) must be replaced.

REASSEMBLY

Wheel Cylinder Assembly (With Auto-adjuster)

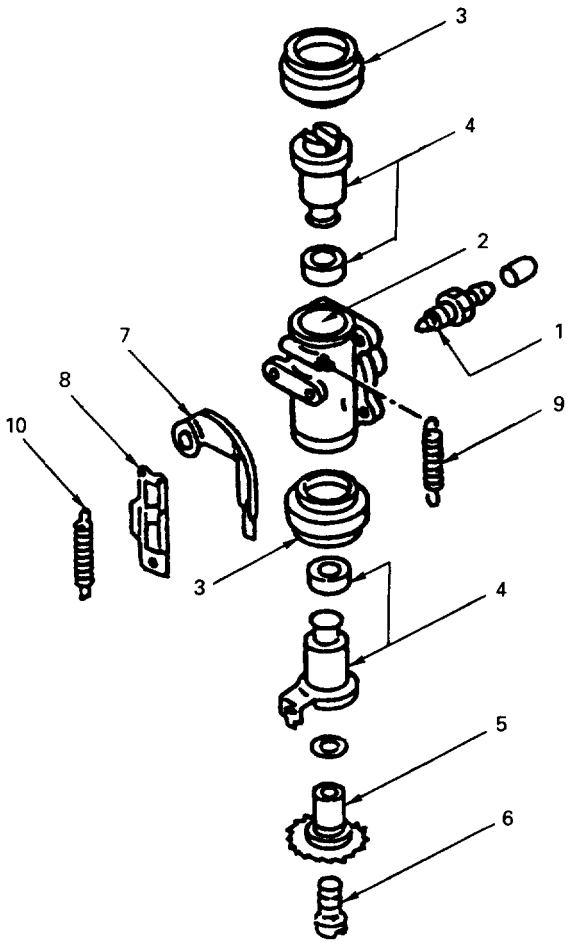

Reassembly Steps

1. Bleeder screw
2. Wheel cylinder body
3. Boot
4. Piston assembly
5. Adjuster gear
6. Adjusting screw
7. Adjuster lever
8. Fitting
9. Overtravel spring
10. Return spring

Reassembly Steps

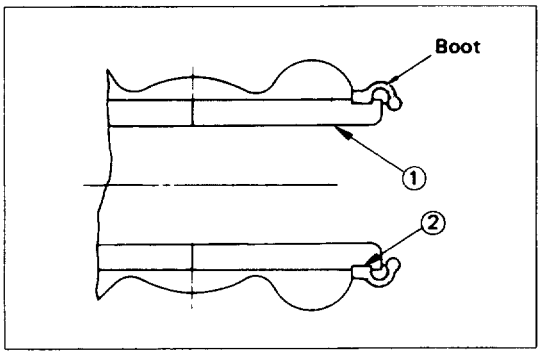

1. **Bleeder Screw**
2. **Wheel Cylinder Body**
   1. Apply a coat of rubber grease to the cylinder body bore ① and the grooves for the boots ②.
   2. Fit the boot edge securely into the mating groove of the cylinder body.

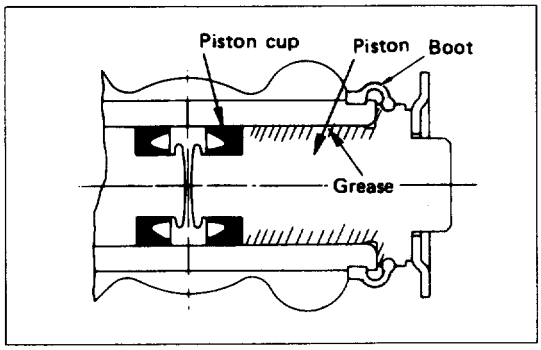

3. **Boot**
4. **Piston Assembly**
   1. Apply a coat of rubber grease to the piston cups and the pistons.

      Be sure to lubricate the entire cylinder body bore with the rubber grease.
   2. Install the piston assembly to the cylinder.

   NOTE:

   After installation of the piston assembly into the cylinder body bore, fit the boot edge securely into the mating groove of the piston.

   Make sure that the two boot edges firmly sealed into the grooves.

   Be careful not to damage the piston cups and the boots.

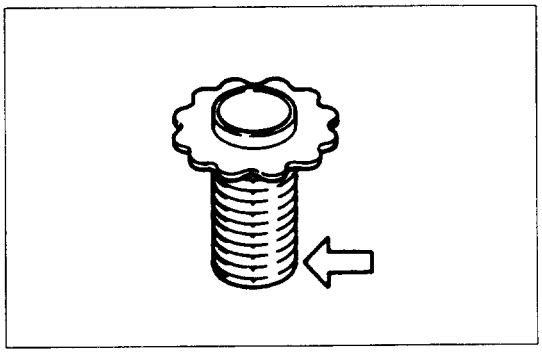

5. **Adjuster Gear**
6. **Adjusting Screw**

   Apply a coat of molybdenum disulfide grease to the adjusting screw slit and threads.

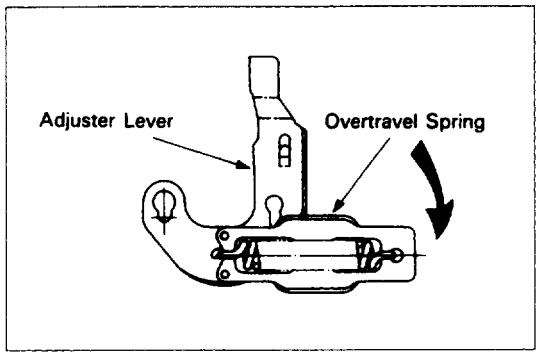

7. **Adjuster Lever**
8. **Fitting**
9. **Overtravel Spring**
   1) Hook one end of the overtravel spring to the adjuster lever hole as shown in the illustration.
   2) Hook the other end of the overtravel spring to the fitting slot.

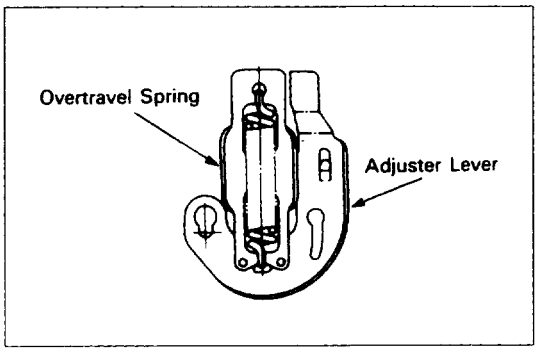

3) Turn the overtravel spring 90 degrees counterclockwise as shown in the illustrations.

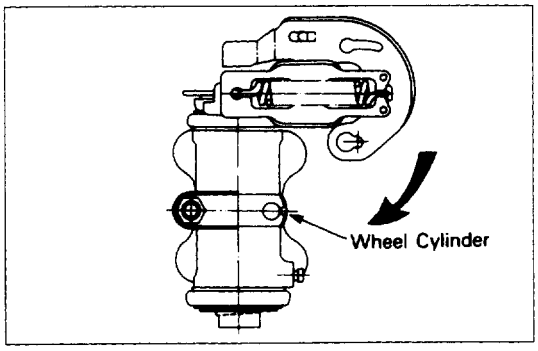

(Wheel Cylinder Body)

Install the adjuster lever and the overtravel spring to the wheel cylinder body.

1) Hook the overtravel spring fitting slot side to the wheel cylinder body bracket hole.

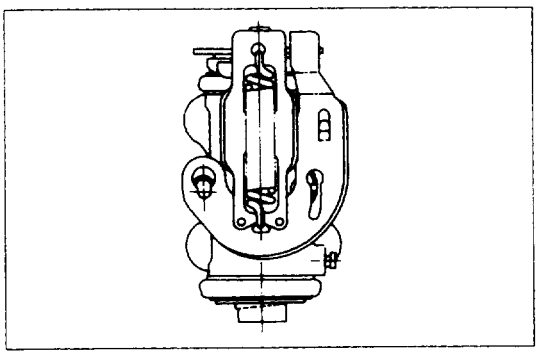

2) Turn the adjuster lever and the overtravel spring 90 degrees clockwise as shown in the illustration.

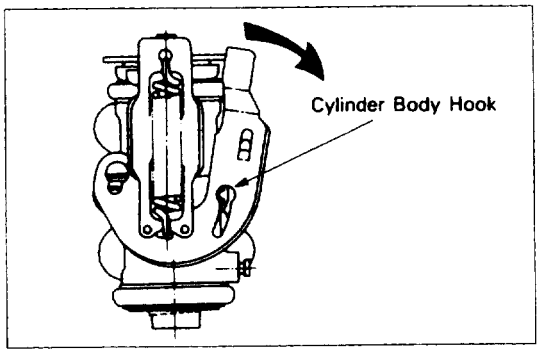

3) Turn the adjuster lever slightly clockwise to attach the adjuster lever hole to the wheel cylinder body hook.

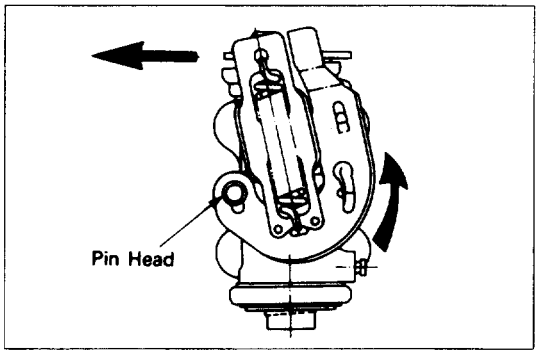

4) Push the wheel cylinder body and bracket to the left as shown in the illustration.
5) Turn the adjuster lever counterclockwise to install the pin head through the adjuster lever hole.

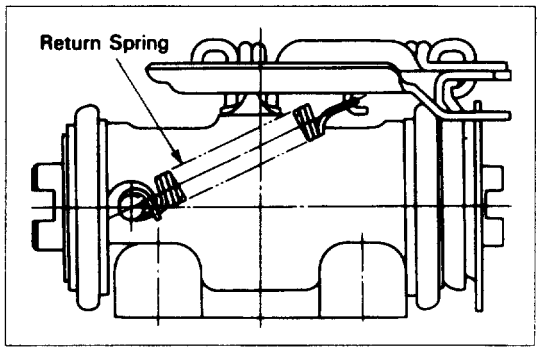

10. Return Spring

Hook the return spring to the wheel cylinder body pin.

MASTER CYLINDER ASSEMBLY (NHR)

DISASSEMBLY

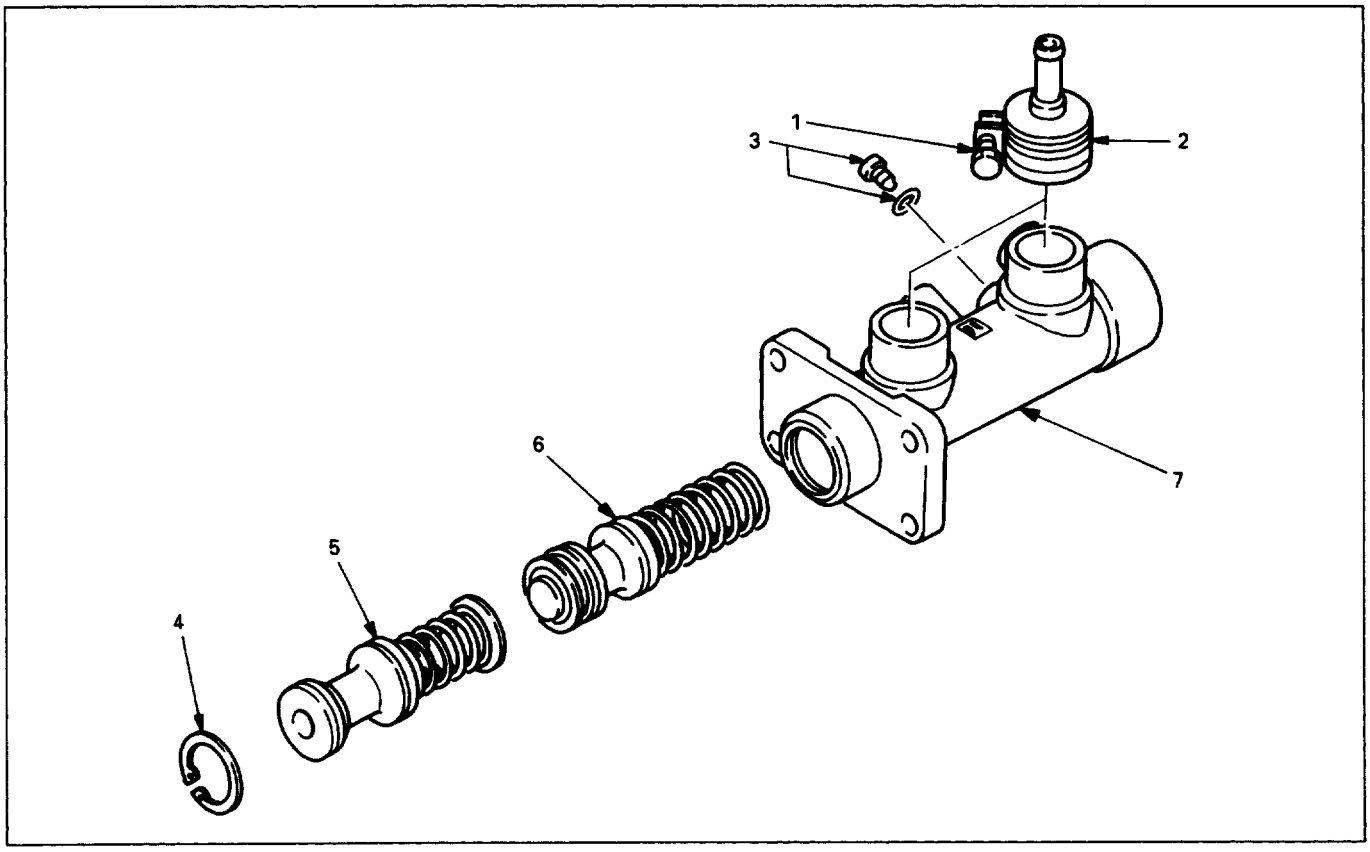

Disassembly Steps

1. Hose clamp
2. Hose joint
3. Stopper screw and gasket
4. Snap ring
5. Primary piston assembly
6. Secondary piston assembly
7. Cylinder body

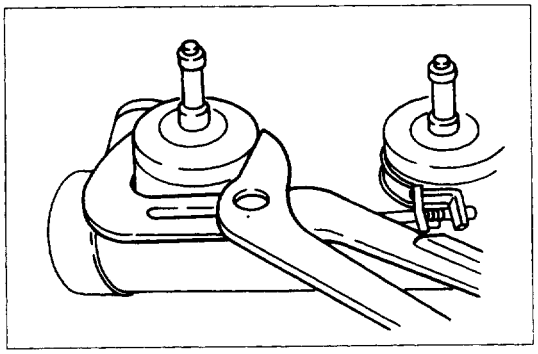

Disassembly Steps

1. **Hose Clamp**
2. **Hose Joint**

   Use a pair of pliers to remove the hose joint.

   Take care not to damage the hose joint and the cylinder body.

3. **Stopper Screw and Gasket**
4. **Snap Ring**
5. **Primary Piston Assembly**
6. **Secondary Piston Assembly**
7. **Cylinder Body**

INSPECTION AND REPAIR

Make the necessary adjustments, repairs, and part replacements if excessive wear or damage is discovered during inspection.

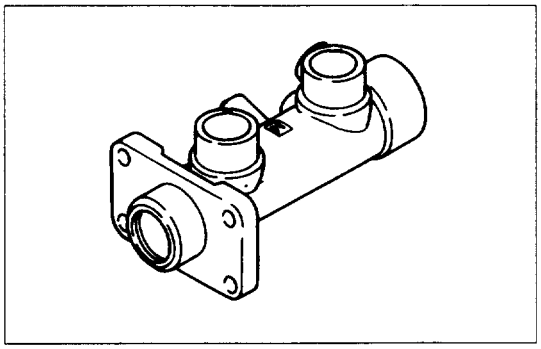

Cylinder Body

Visually check that the master cylinder bore, for scuf or scratch, if these conditions are presented, the cylinder body must be replaced.

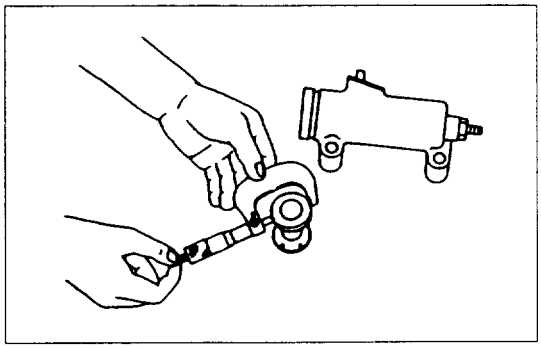

Piston

Piston and Master Cylinder Clearance

1. Use a micrometer to measure the piston diameter.
2. Use an inside dial indicator to measure the cylinder bore.
3. Calculate the clearance between the wheel cylinder and the piston.

   If the clearance exceeds the specified limit, the piston assembly must be replaced.

Piston and Master Cylinder Clearance mm(in)

Standard	Limit
0.11 – 0.195 (0.004 – 0.008)	0.22 (0.009)

REASSEMBLY

Master Cylinder Assembly (NHR)

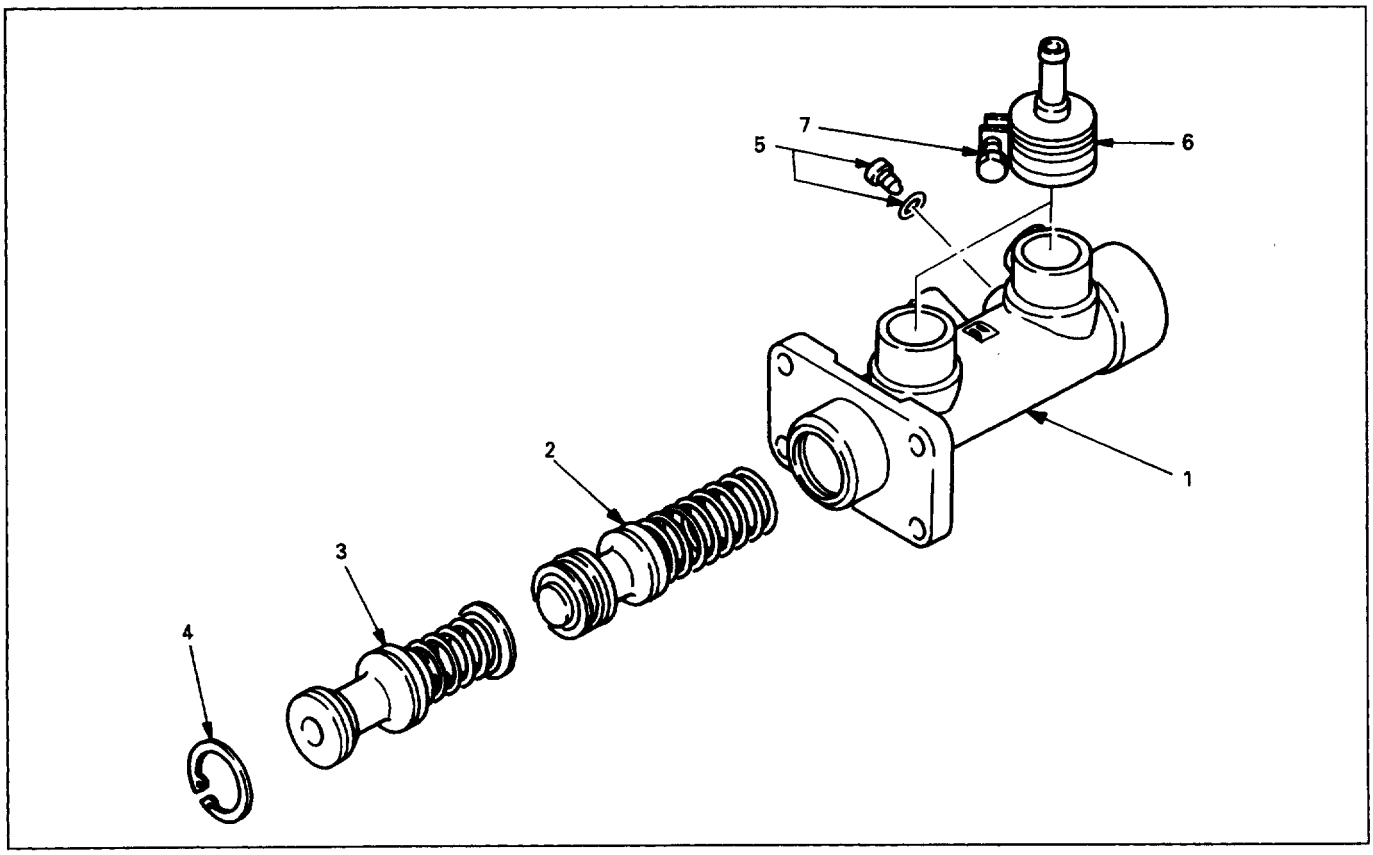

Reassembly Steps

1. Cylinder body
2. Secondary piston assembly
3. Primary piston assembly
4. Snap ring
5. Stopper screw and gasket
6. Hose joint
7. Hose clamp

Reassembly Steps

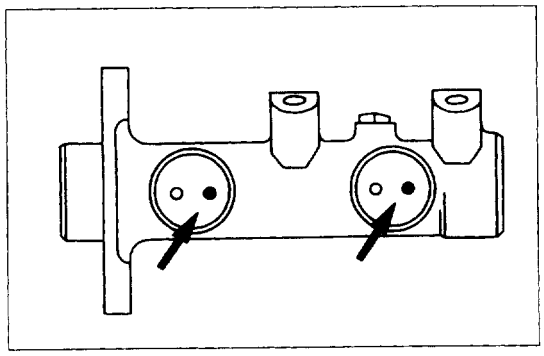

1. Cylinder Body

Clean the cylinder body and blow the return ports with compressed air.

Do not allow the return ports clogged with any foreign material.

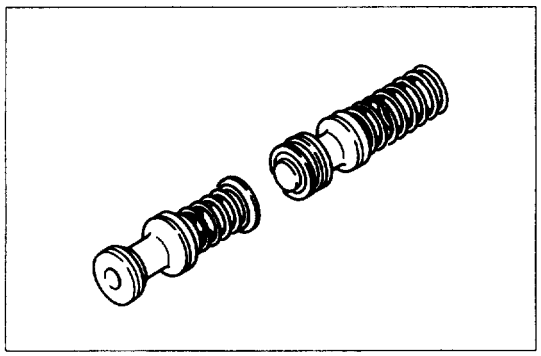

2. **Secondary Piston Assembly**
3. **Primary Piston Assembly**
   1. Rinse the piston assembly in clean brake fluid.
   2. Install the piston assembly to the master cylinder.

Note:

Take care not to scratch the primary and secondary cups when installing the piston assembly.

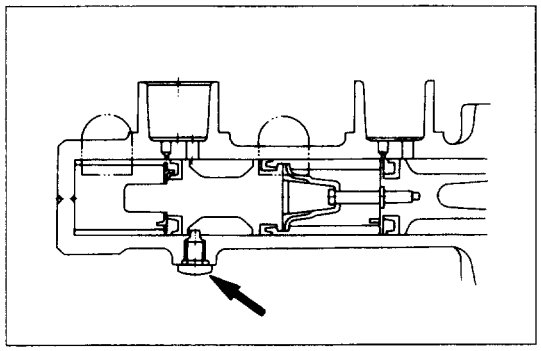

4. **Snap Ring**
5. **Stopper Screw and Gasket**
   1. Slide the piston until the oil cavity of the secondary piston dears the stopper bolt hole.
   2. Install the stopper screw and tighten it to the specified torque.

Stopper Screw Torque	N·m (kg·m/lb·ft)
27 (2.8 / 20)	

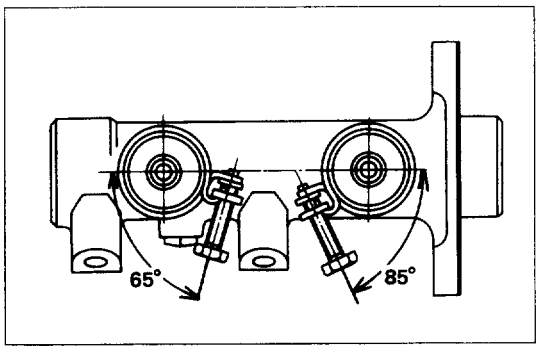

6. **Hose Joint**
7. **Hose Clamp**
   1. Set the clamp in position.
   2. Dip the hose joint in hot water (60° – 80C) for several minutes.
   3. Take out of the hose joint and blow off water immediately and completely.
   4. Fit the hose joint to the cylinder body.
   5. Align the position of the clamp screw as shown in the illustration.
   6. Tighten the clamp screw to the specified torque.

Clamp Screw Torque	N·m (kg·m/lb·in)
2 (0.2 / 17)	

MASTER CYLINDER ASSEMBLY (NKR·NPR·NQR·NPS WITHOUT HYDROMASTER)

DISASSEMBLY

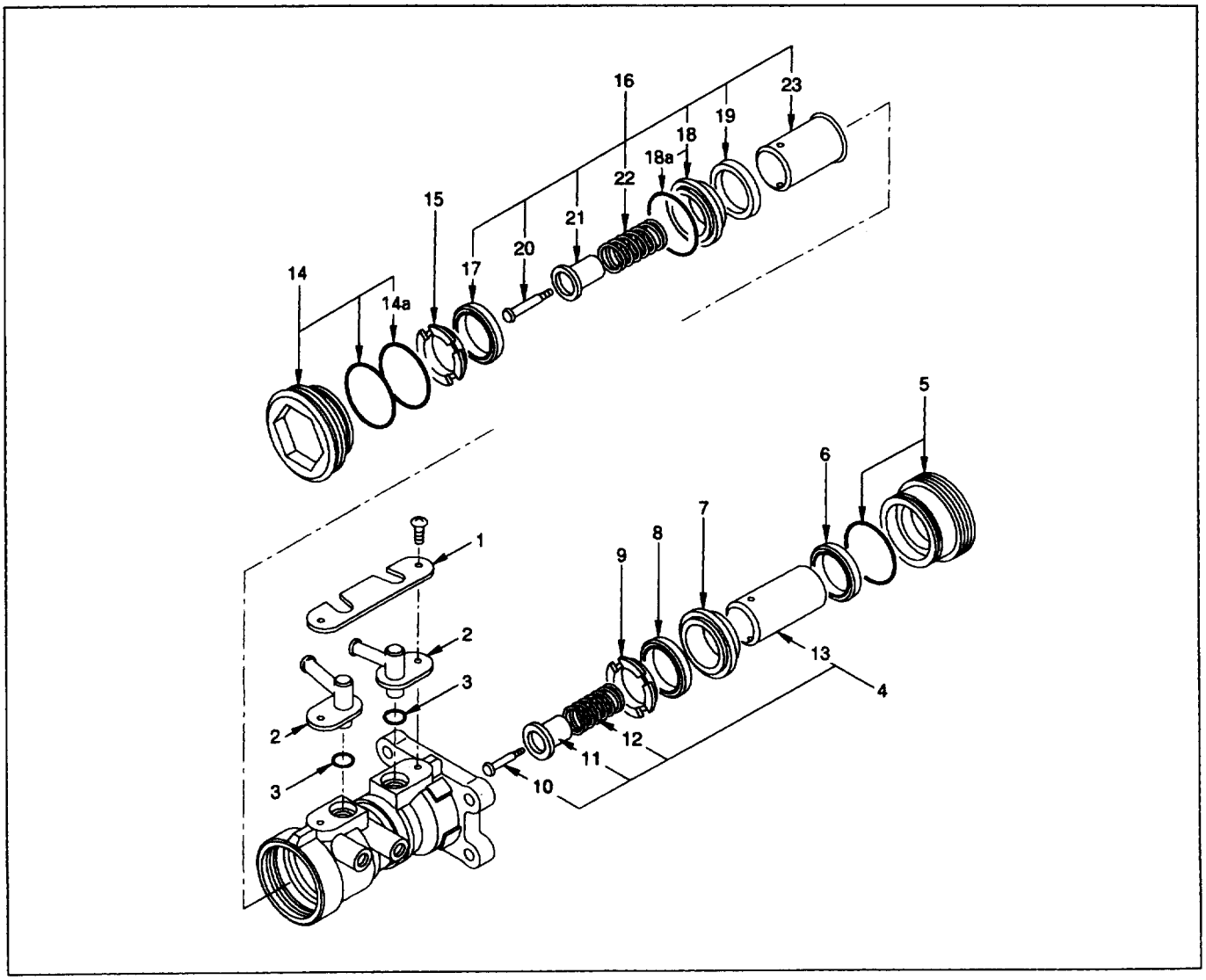

Disassembly Steps

1. Holder plate
2. Hose joint
3. O-ring
4. Primary piston assembly
5. Plug and O-ring
6. Secondary cup
7. Bushing
8. Primary cup
9. Supporter
10. Screw
11. Spring retainer
12. Primary piston spring
13. Primary piston
14. Plug and O-ring
14a. O-ring (RHYTHM make only)
15. Supporter
16. Secondary piston assembly
17. Primary cup
18. Bushing
18a. O-ring (NABCO make only)
19. Secondary cup
20. Screw
21. Spring retainer
22. Secondary piston spring
23. Secondary piston

Disassembly Steps

1. **Holder Plate**
2. **Hose Joint**
3. **O-ring**
4. **Primary Piston Assembly**

   Draw out Piston by hand so that it may not be damaged.

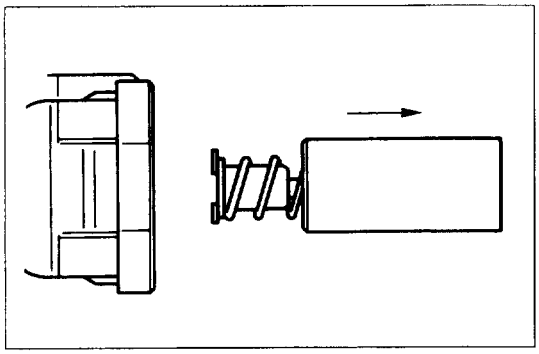

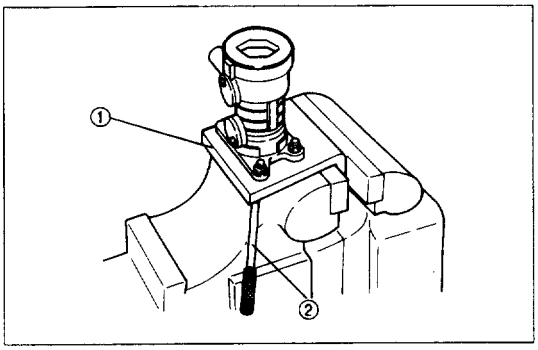

5. **Plug and O-ring**

   Install master cylinder on a support plate ①, fix the support in a vice, and loosen plug using a wrench ②.

   Support plate : 5-8840-2371-0
   Wrench : 5-8840-2370-0
   (Master cylinder inside dia. 31.7 mm)
   Wrench : 5-8840-2369-0
   (Master cylinder inside dia. 28.5 mm)

6. **Secondary Cup**
7. **Bushing**
8. **Primary Cup**
9. **Supporter**
10. **Screw**
11. **Spring Retainer**
12. **Primary Piston Spring**
13. **Primary Piston**

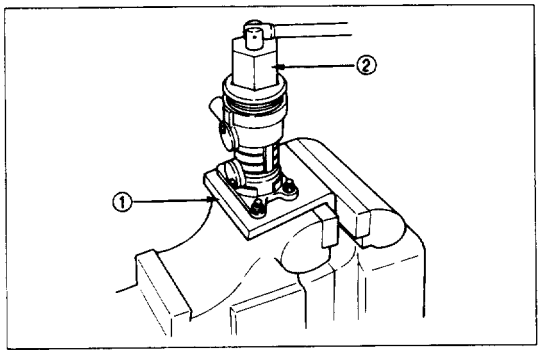

14. **Plug and O-ring**

14a. **O-ring (RHYTHM make only)**

   Install master cylinder on a support plate ①, fix the support in a vice, and loosen plug using a wrench ②.

   Support plate : 5-8840-2371-0
   Wrench : 5-8840-2370-0
   (Master cylinder inside dia. 31.7 mm)
   Wrench : 5-8840-2369-0
   (Master cylinder inside dia. 28.5 mm)

15. **Supporter**
16. **Secondary Piston Assembly**
17. **Primary Cup**
18. **Bushing**

18a. **O-ring (NABCO make only)**

19. **Secondary Cup**
20. **Screw**
21. **Spring Retainer**
22. **Secondary Piston Spring**
23. **Secondary Piston**

INSPECTION AND REPAIR

Make the necessary adjustments, repairs, and part replacements if excessive wear or damage is discovered during inspection.

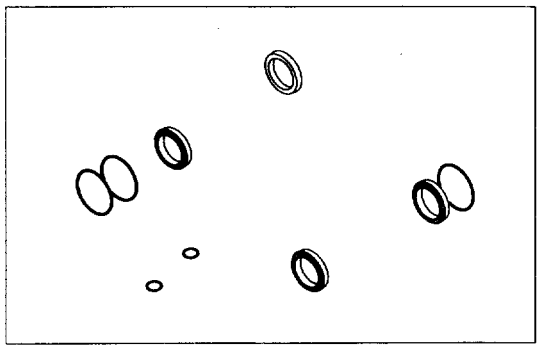

Cup and O-ring

1. Wash each part with brake oil and check for wear, deterioration, and damage.
2. Replace the parts shown on the left (Cups and O-rings).

Note:

Master cylinder is available in two makes, RHYTHM and NABCO.

When ordering master cylinder parts, please make sure by master cylinder body mark which make your master cylinder is.

REASSEMBLY

Master Cylinder Assembly (NKR·NPR·NQR without Hydromaster)

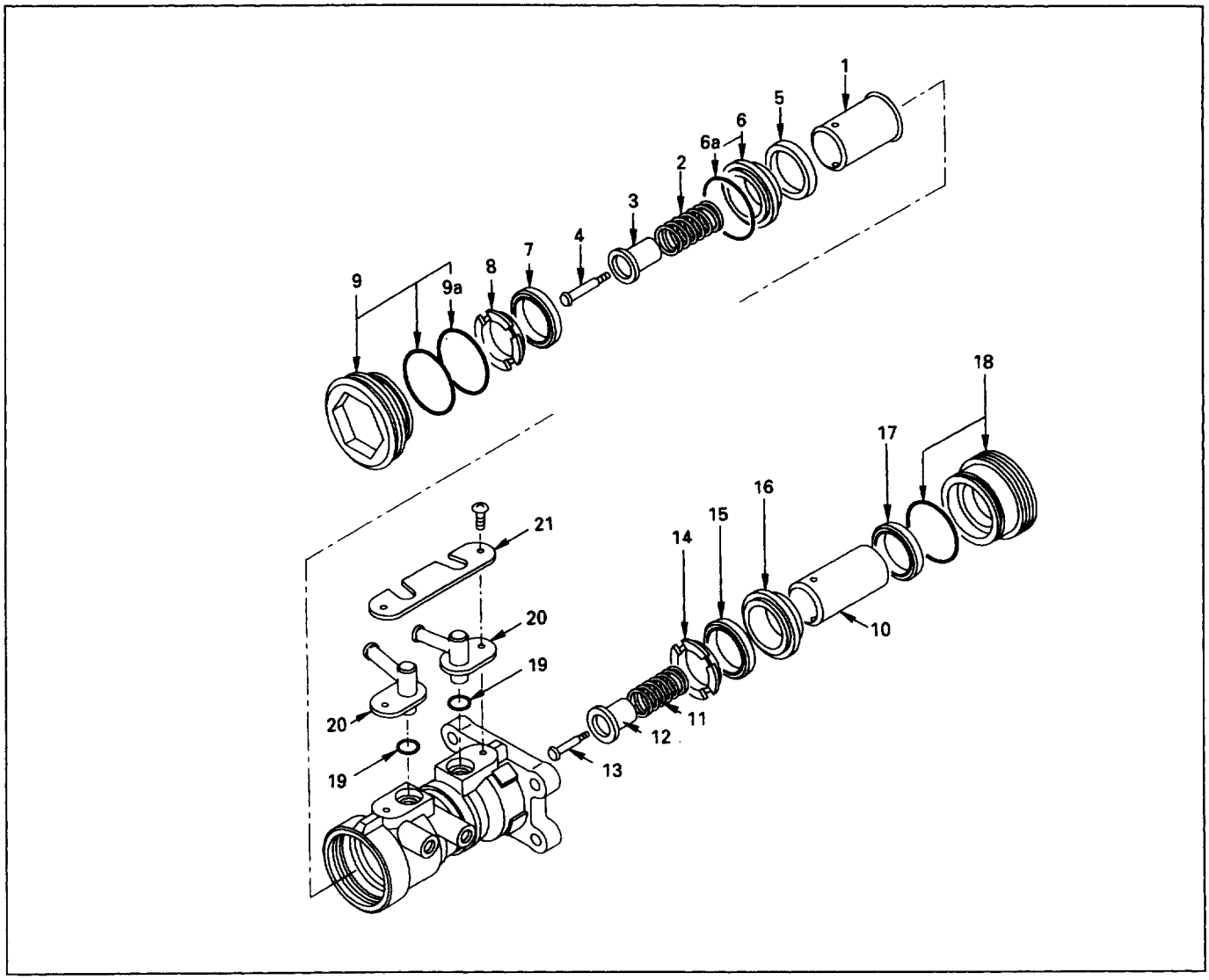

Reassembly Steps

1. Secondary piston
2. Secondary piston spring
3. Spring retainer
4. Screw
5. Secondary cup
6. Bushing
6a. O-ring (NABCO make only)
7. Primary cup
8. Supporter
9. Plug and O-ring
9a. O-ring (RHYTHM make only)
10. Primary piston
11. Primary piston spring
12. Spring retainer
13. Screw
14. Supporter
15. Primary cup
16. Bushing
17. Secondary cup
18. Plug and O-ring
19. O-ring
20. Hose joint
21. Holder plate

Reassembly Steps

1. **Secondary Piston**
2. **Secondary Piston Spring**
3. **Spring Retainer**
4. **Screw**

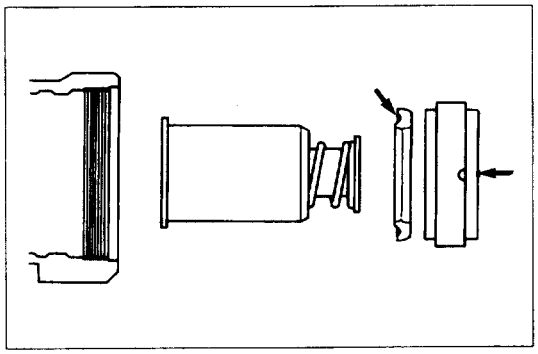

5. **Secondary Cup**
6. **Bushing**

   Combine secondary cup and bushing with secondary piston as indicated as arrows, and push the assembly in until bushing comes into contact with cylinder body step.

6a. O-ring (NABCO make only)

Install the O-ring to the bushing.

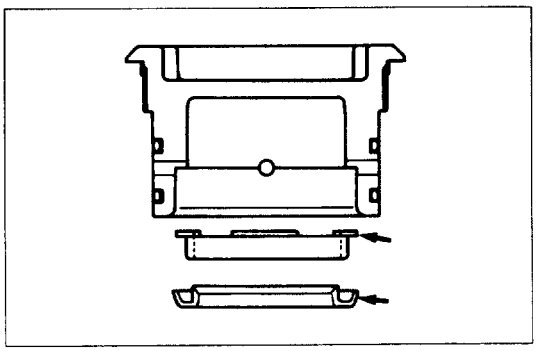

7. **Primary Cup**
8. **Supporter**
9. **Plug and O-ring**

9a. O-ring (RHYTHM make only)

Combine primary cup and supporter with plug as indicated by arrows.

Then tighten plug to specified tightening torque.

Plug Torque		N·m (kg·m/lb·ft)
Master Cylinder Inside dia. (mm)	28.5	40 (4.1 / 30)
	31.7	44 (4.5 / 33)

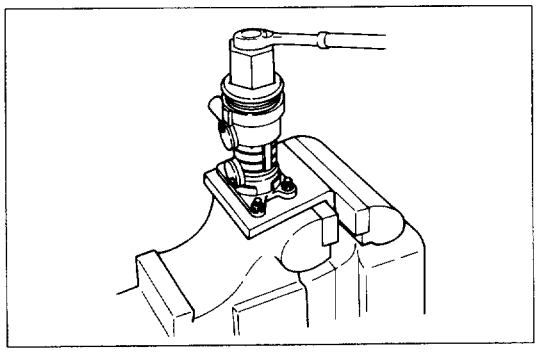

Support plate : 5-8840-2371-0

Wrench : 5-8840-2370-0

(Master cylinder inside dia. 31.7mm)

Wrench : 5-8840-2369-0

(Master cylinder inside dia. 28.5mm)

Note:

If plug tightened to specified torque is found floating from cylinder body.

Plug should be disassembled again and check for abnormal parts fitting. Then reassemble.

10. **Primary Piston**
11. **Primary Piston Spring**
12. **Spring Retainer**
13. **Screw**

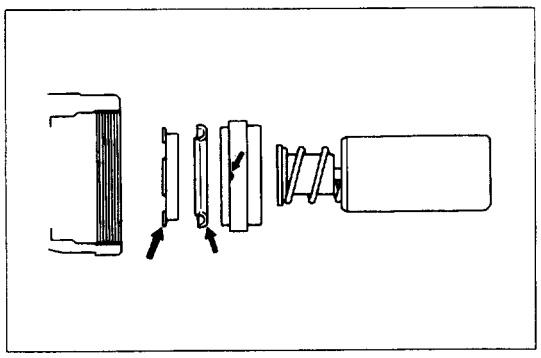

14. **Supporter**
15. **Primary Cup**
16. **Bushing**
    1. Combined the parts of primary piston as indicated by arrows.
       Then push the assembly in until bushing comes into contact with the step in cylinder body.
    2. Draw out primary piston alone taking care not to be let bushing get out of the step.

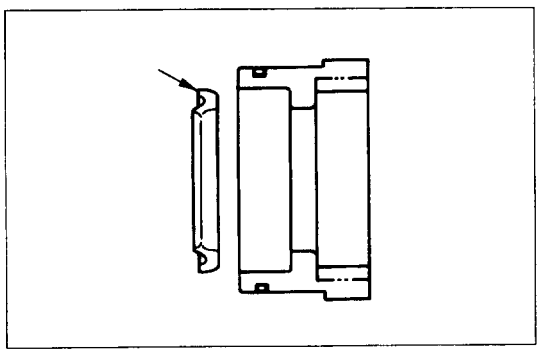

17. **Secondary Cup**
18. **Plug and O-ring**

Combine secondary cup with plug as indicated by arrow, and tighten to specified tightening torque

Plug Torque		N·m (kg·m/lb·ft)
Master Cylinder Inside dia. (mm)	28.5	40 (4.1 / 30)
	31.7	44 (4.5 / 33)

Support date : 5-8840-2371-0
Wrench : 5-8840-2370-0
(Master cylinder inside dia. 31.7mm)
Wrench : 5-8840-2369-0
(Master cylinder inside dia. 28.5mm)

Note:

If plug tightened to specified torque is found floating from cylinder body.

Plug should be disassembled again and check for abnormal parts fitting. Then reassemble.

19. O-ring
20. Hose Joint
21. Holder Plate

MASTER CYLINDER ASSEMBLY (NQR WITH HYDROMASTER)

DISASSEMBLY

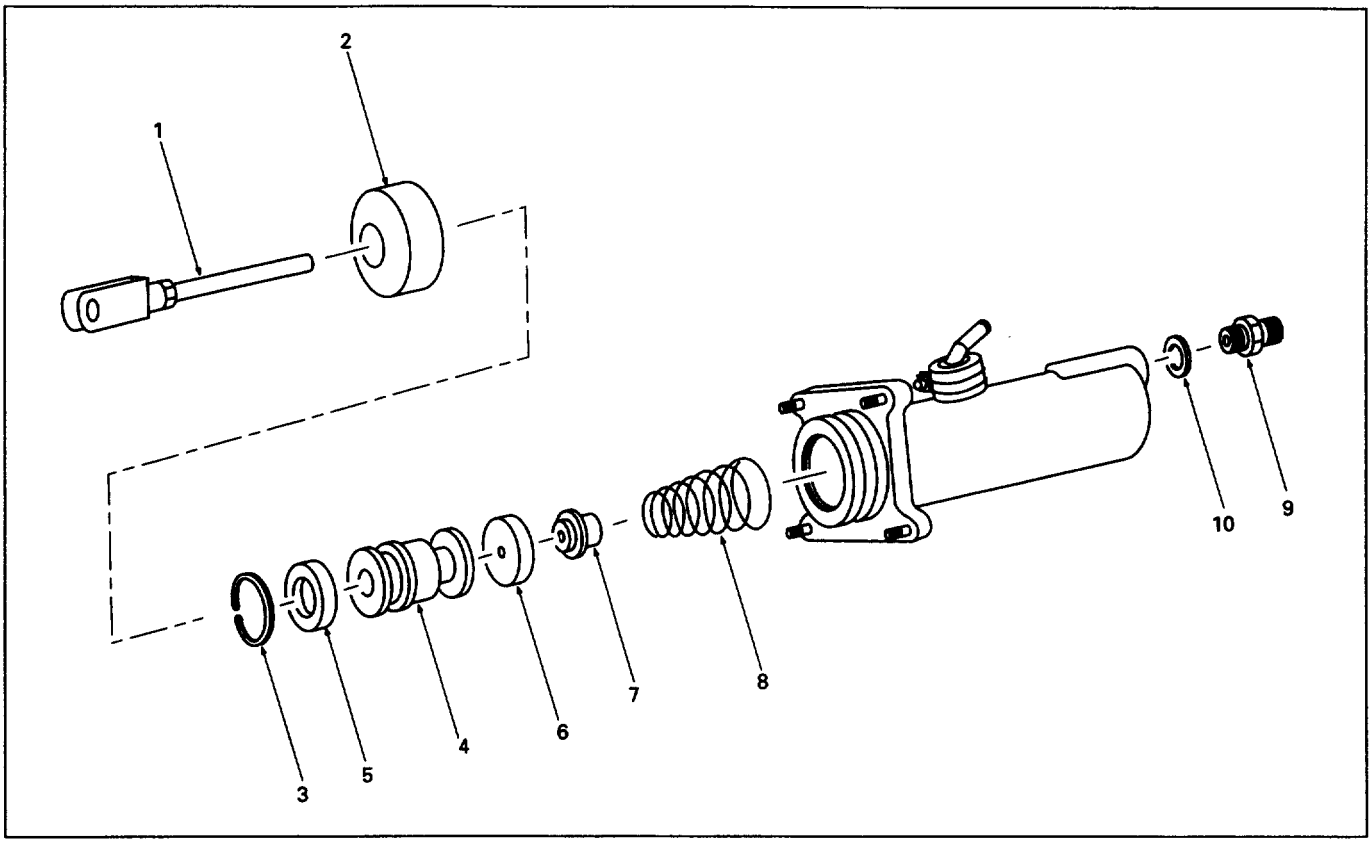

Disassembly Steps

1. Push rod
2. Dust cover
3. Snap ring
4. Piston
5. Secondary cup
6. Primary cup
7. Cup filler
8. Return spring
9. Joint
10. Gasket

Disassembly Steps

1. **Push Rod**
2. **Dust Cover**
3. **Snap Ring**
4. **Piston**
5. **Secondary Cup**
6. **Primary Cup**
7. **Cup Filler**
8. **Return Spring**
9. **Joint**
10. **Gasket**

INSPECTION AND REPAIR

Make the necessary adjustments, repairs, and part replacements if excessive wear or damage is discovered during inspection.

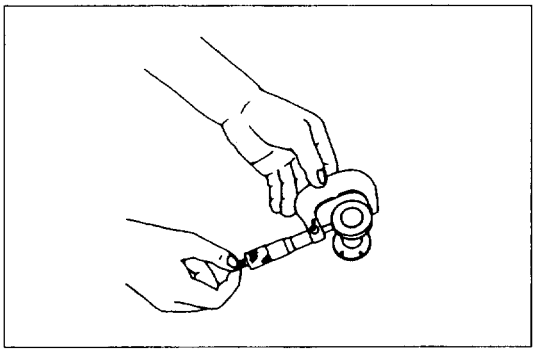

Piston and Master Cylinder Clearance

1. Use a micrometer to measure the piston diameter.
2. Use an inside dial indicator to measure the cylinder bore.
3. Calculate the clearance between the cylinder and the piston.

   If the cleareance exceeds the specified limit, the piston must be replaced.

Piston and Master Cylinder Clearance mm(in)

Standard	Limit
0.09 (0.0035)	0.14 (0.0055)

REASSEMBLY

Master Cylinder Assembly (NQR with Hydromaster)

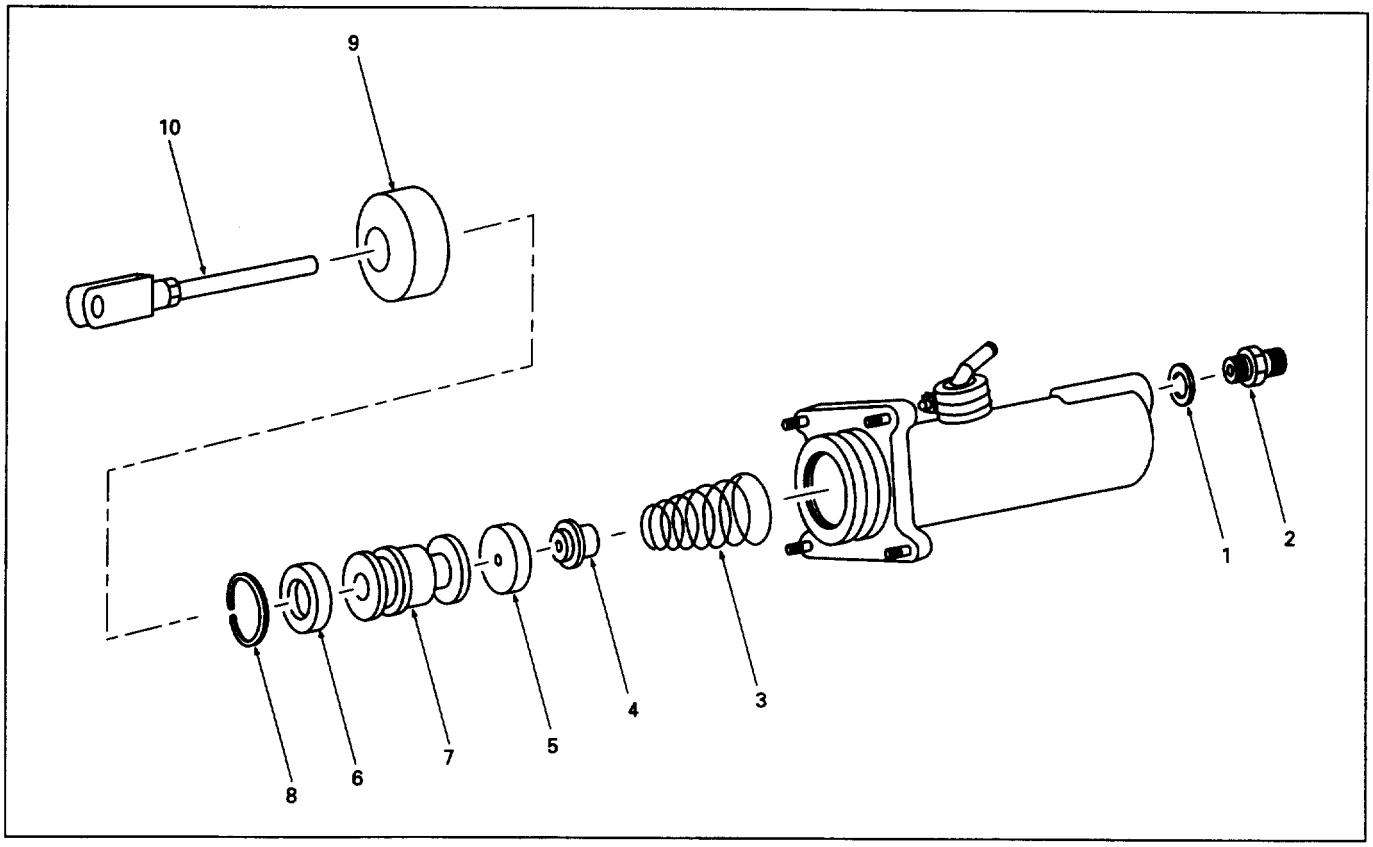

Reassembly Steps

1 Gasket
2. Joint
3. Return spring
4. Cup filler
5. Primary cup
6. Secondary cup
7. Piston
8. Snap ring
9. Dust cover
10. Push rod

Reassembly Steps

1. **Gasket**
2. **Joint**
3. **Return Spring**
4. **Cup Filler**
5. **Primary Cup**
   1. Rinse the primary cup in clean brake fluid.

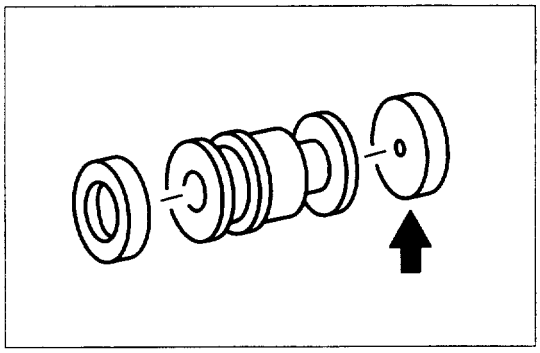

6. **Secondary Cup**
   1. Rinse the secondary cup in clean brake fluid.
   2. Install the secondary cup to the piston.

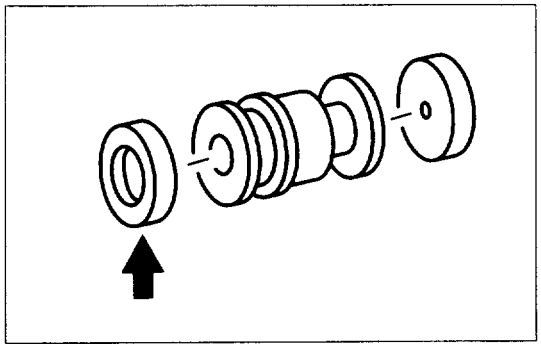

7. **Piston**
   1. Rinse the piston assembly in clean brake fluid.
   2. Install the piston assembly to the master cylinder.

   Note:

   Take care not to scratch the primary and secondary cups when installing the piston assembly.

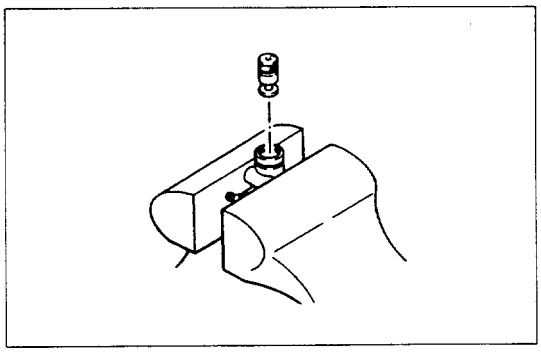

8. **Snap Ring**
9. **Dust Cover**
10. **Push Rod**

HYDROMASTER

REMOVAL

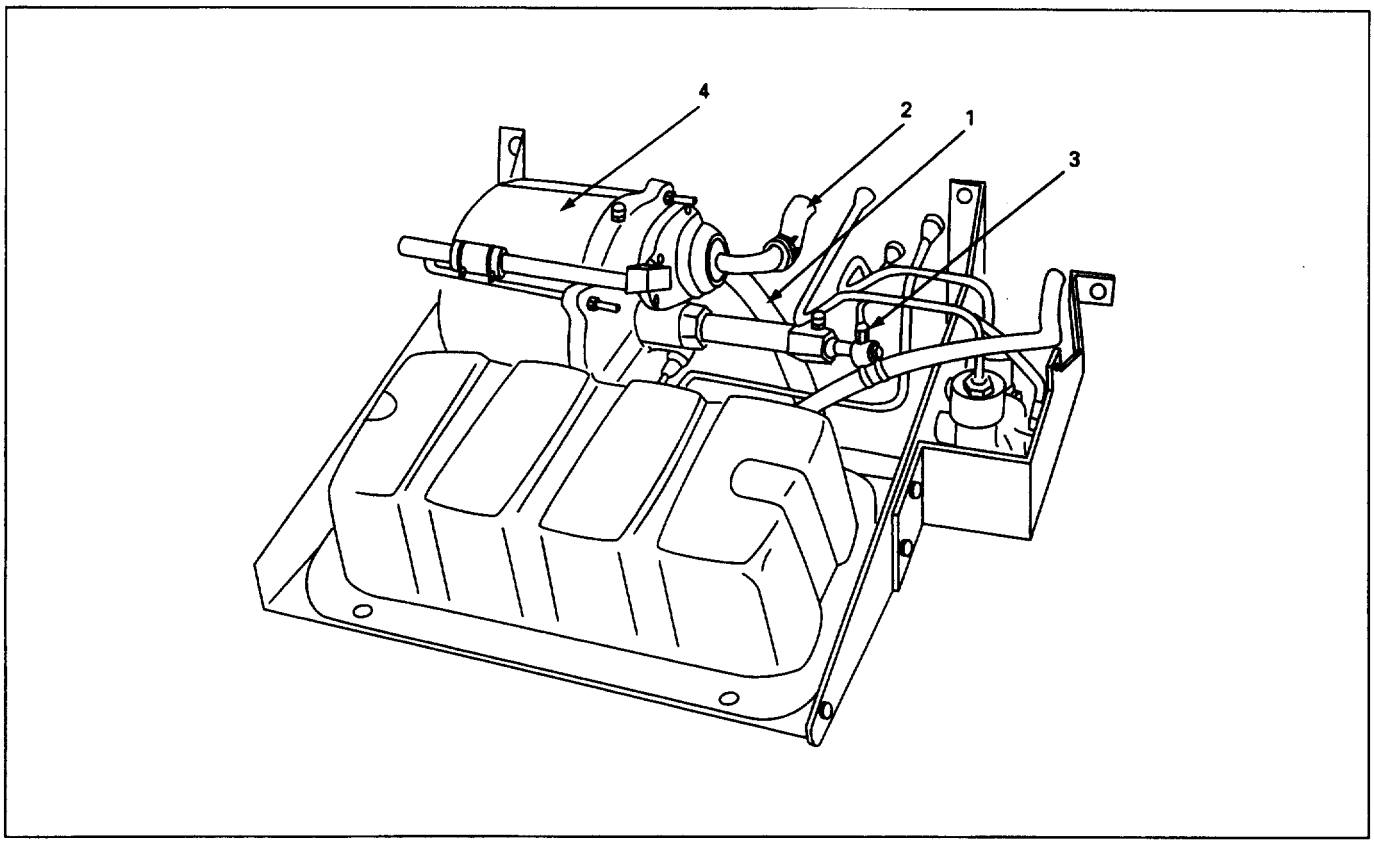

Removal Steps

1. Vacuum hose
2. Air hose
3. Brake pipe
4. Hydromaster

Removal Steps

1. **Vacuum Hose**
2. **Air Hose**
3. **Brake Pipe**

   Plug or cover the removed hoses and the brake pipe to prevent brake fluid leakage and the entry of foreign material.
4. **Hydromaster**

INSTALLATION

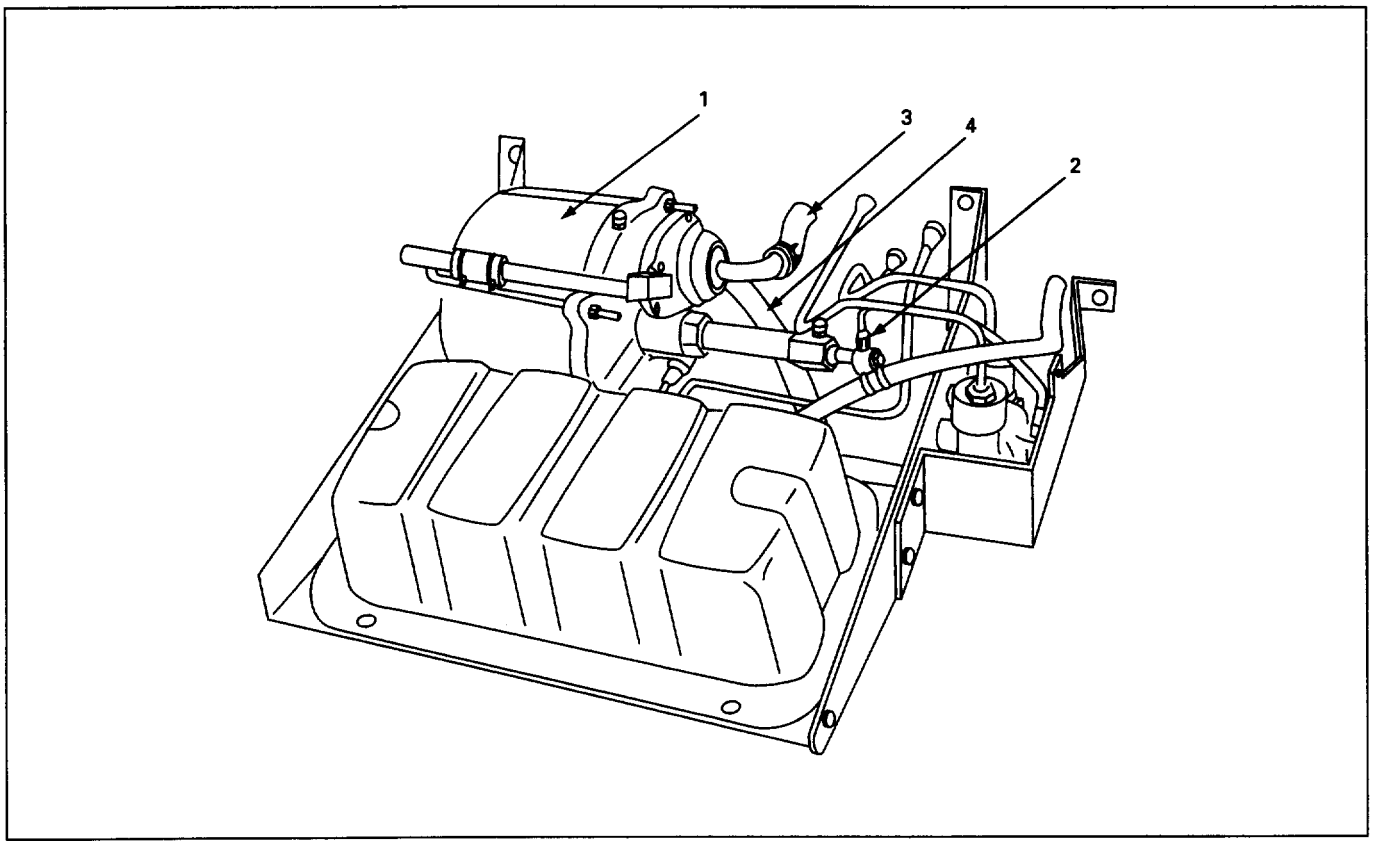

Installation Steps

1. Hydromaster
2. Brake pipe
3. Air hose
4. Vacuum hose

Installation Steps

1. **Hydromaster**
2. **Brake Pipe**
3. **Air Hose**
4. **Vacuum Hose**

   Bleed the brake hydraulic circuit after installing the hydromaster.

   Refer to "SERVICING" in SECTION 00 (Service Information) for the brake bleeding procedure.

UNIT REPAIR

DISASSEMBLY

Hydromaster Assembly

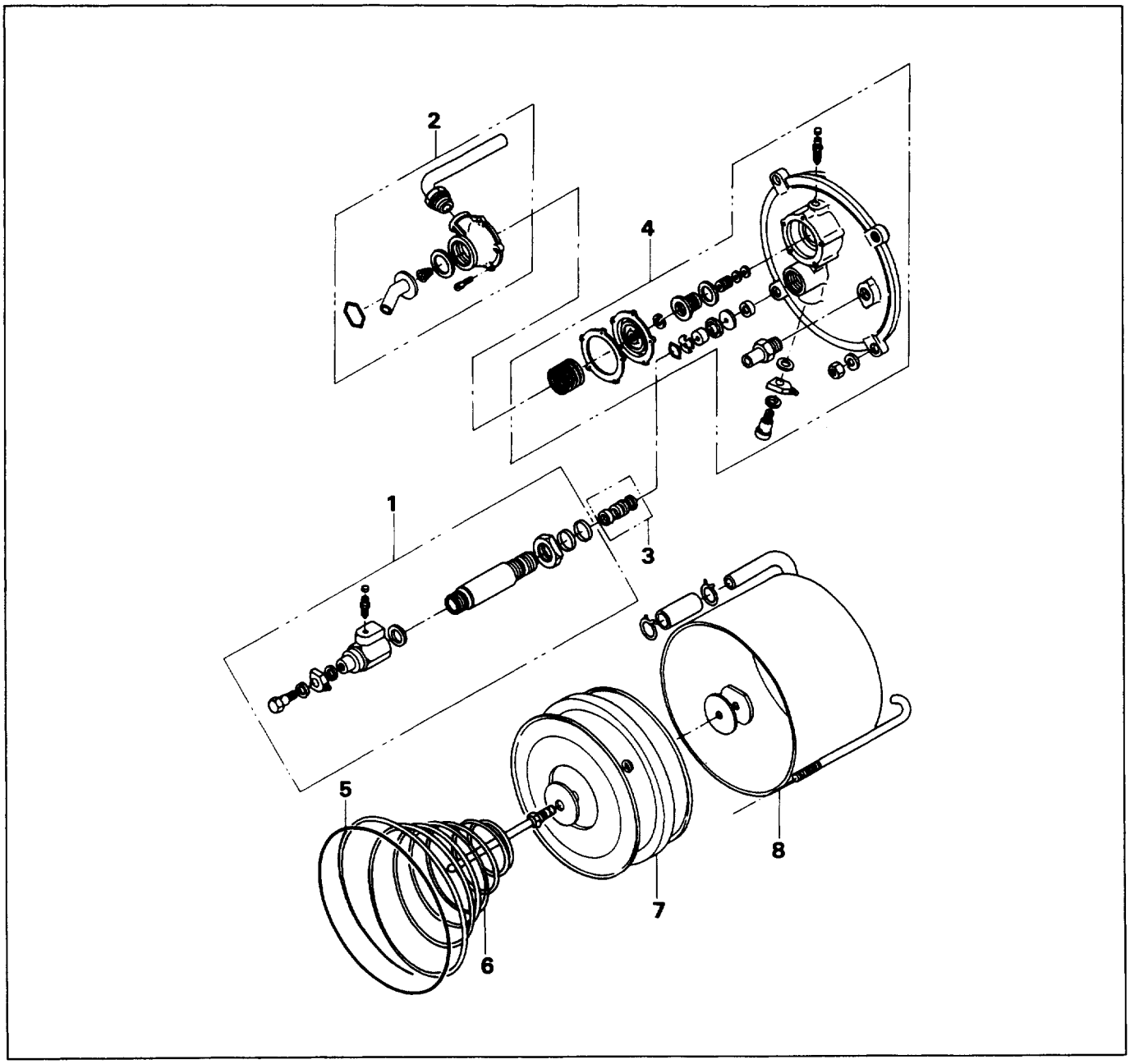

Disassembly Steps

1. Hydraulic cylinder assembly
2. Valve body assembly
3. Hydraulic piston assembly
4. End plate assembly
5. O-ring
6. Return spring
7. Power piston assembly
8. Cylinder shell

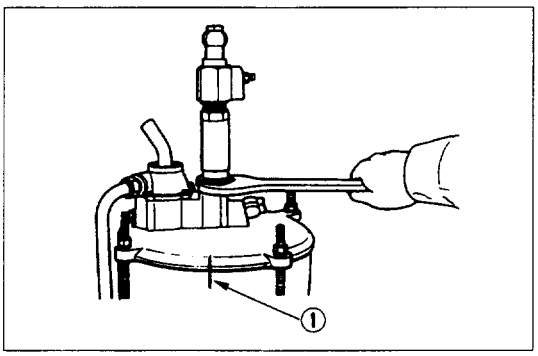

Disassembly Steps

1. **Hydraulic Cylinder Assembly**
   1. Apply a setting mark ① to the cylinder shell and the end plate before disassembling the hydromaster.
   2. Use a 41mm hex wrench to loosen the lock nut and remove the hydraulic cylinder assembly.

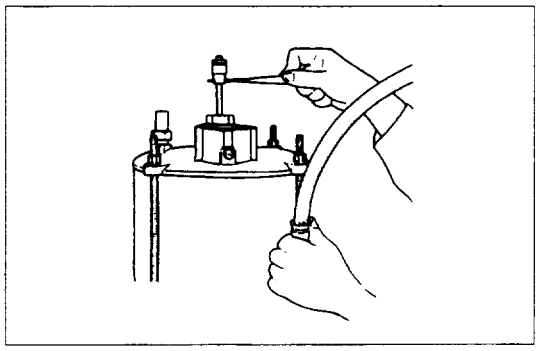

2. **Valve Body Assembly**
3. **Hydraulic Piston Assembly**
   1. Apply compressed air from the control pipe to the hydromaster raise the push rod.
   2. Remove the straight pin.
   3. Remove the hydraulic piston from the push rod.
   4. Stop the compressed air.
4. **End Plate Assembly**
5. **O-ring**
6. **Return Spring**
7. **Power Piston Assembly**
8. **Cylinder Shell**

Hydromaster Cylinder and Piston Assembly

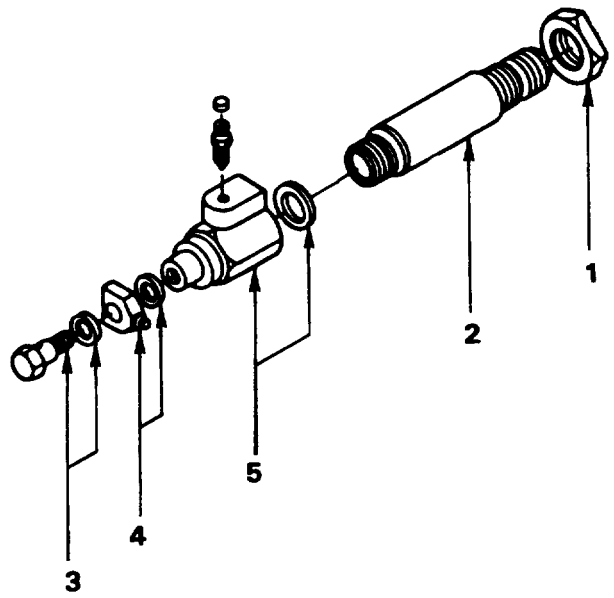

Disassembly Steps

1. Lock nut
2. Cylinder
3. Eye bolt
4. Eye connector
5. Cap and gasket

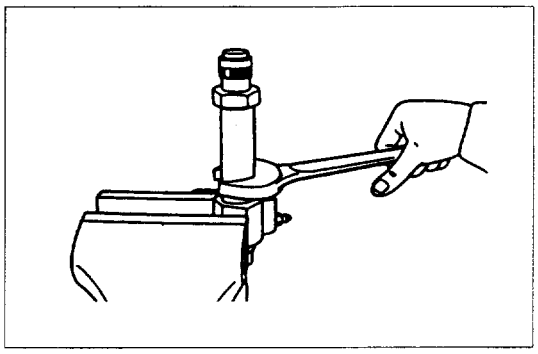

Disassembly Steps

1. **Lock Nut**
2. **Cylinder**
3. **Eye Bolt**
4. **Eye Connector**
5. **Cap and Gasket**
   1. Clamp the cap in a vise.
   2. Use a wrench to remove the cylinder from the cap. Apply the wrench to the hex portion of the cylinder.

Valve Body Assembly

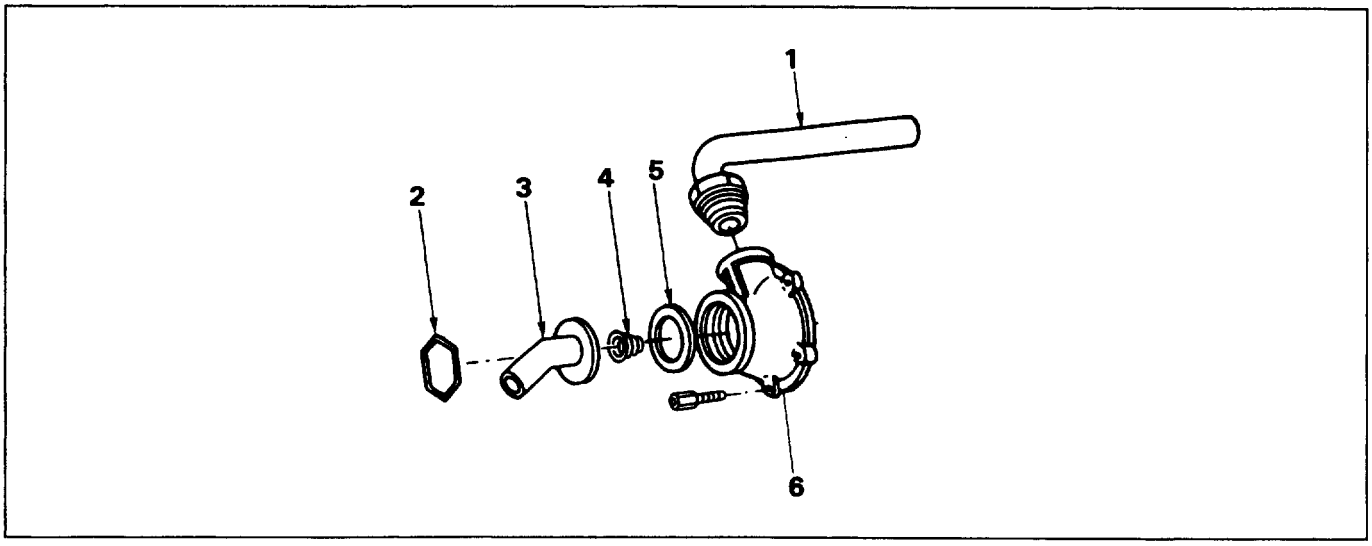

Disassembly Steps

1. Elbow
2. Retaining ring
3. Pipe
4. Spring
5. Washer
6. Valve body

Disassembly Steps

1. **Elbow**
2. **Retaining Ring**
3. **Pipe**
4. **Spring**
5. **Washer**
6. **Valve Body**

End Plate Assembly

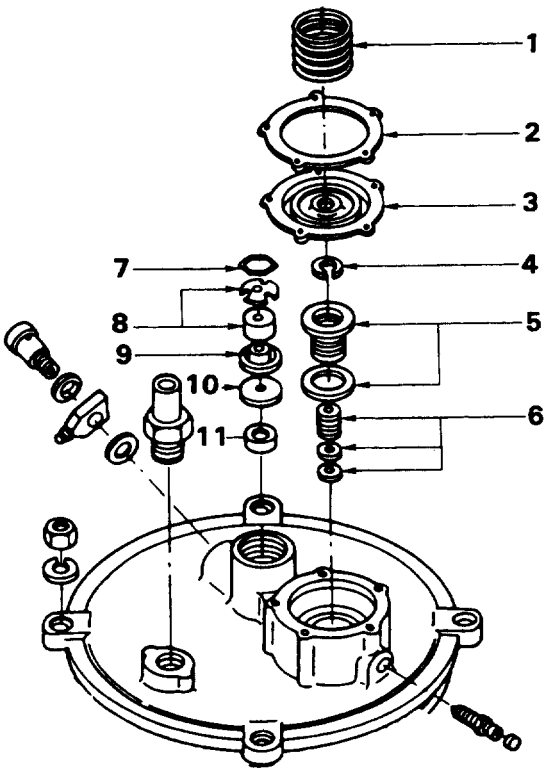

Disassembly Steps

1. Spring
2. Gasket
3. Diaphragm assembly
4. Retaining ring
5. Fitting
6. Relay valve piston assembly
7. Retaining ring
8. Retainer
9. Cup gasket
10. Washer
11. Oil seal

Disassembly Steps

1. **Spring**
2. **Gasket**
3. **Diaphragm Assembly**
4. **Retaining Ring**
5. **Fitting**
   1. Clamp the end plate assembly.
   2. Use a box wrench to remove the fitting.

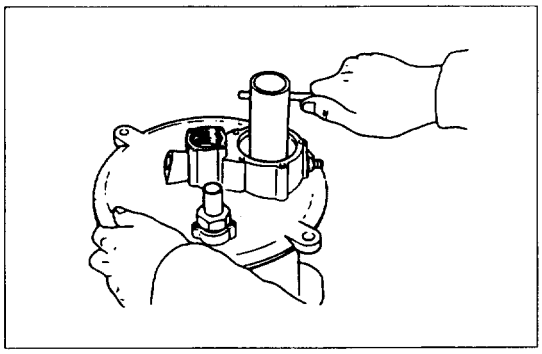

6. **Relay Valve Piston Assembly**
7. **Retaining Ring**
8. **Retainer**
9. **Cup Gasket**
10. **Washer**
11. **Oil Seal**
    1. Clamp the end plate assembly.
    2. Use an oil seal replacer and a hammer to remove the oil seal from the cylinder shell.

       Take care not to scratch the end plate inner surface.

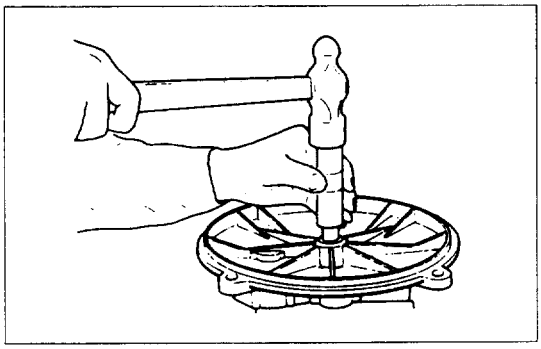

Power Piston Assembly

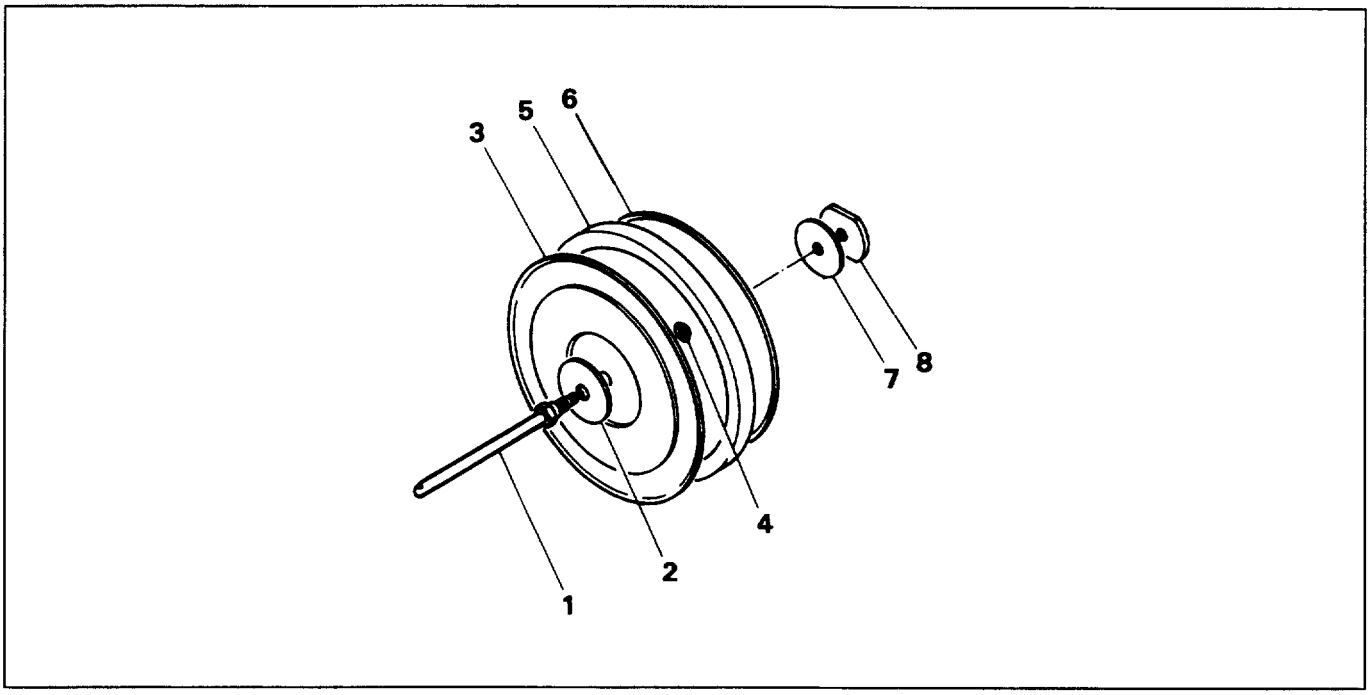

Disassembly Steps

1. Nut
2. Washer
3. Plate
4. Gasket
5. Gasket
6. Plate
7. Washer
8. Push rod

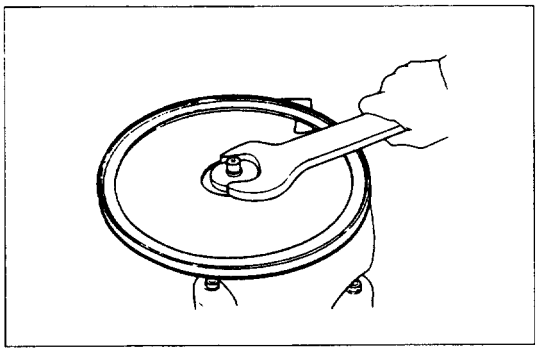

Disassembly Steps

1. **Nut**
   Use a wrench to loosen the nut.
2. **Washer**
3. **Plate**
4. **Gasket**
5. **Gasket**
6. **Plate**
7. **Washer**
8. **Push Rod**

INSPECTION AND REPAIR

Make the necessary adjustments, repairs, and part replacements if excessive wear or damage is discovered during inspection.

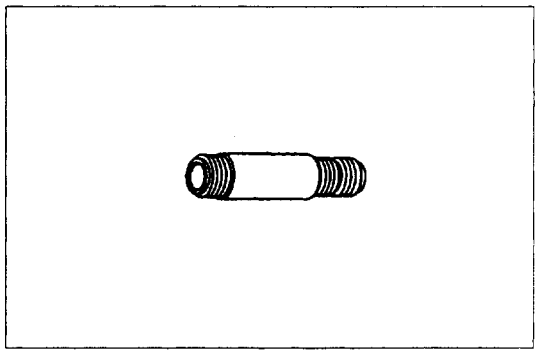

Cylinder

Visually inspect the cylinder bore for corrosion and other damage.

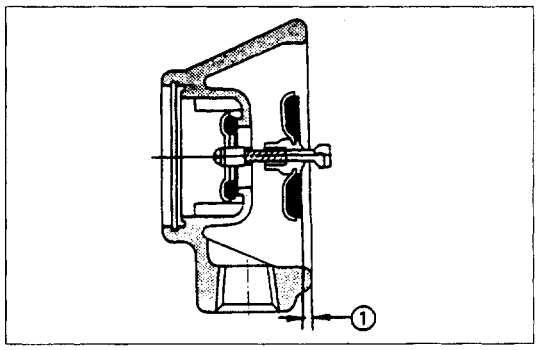

Poppet Valve

1. Visually inspect the rubber seal surface for exessive wear and damage.
2. Measure the poppet valve body and seat clearance.

Poppet Valve Body and Seat Clearance	mm (in)
Standard	1.4 - 2.6 (0.055 - 0.102)

If the measured value is exeeds the specified standard, the poppet valve must be replaced.

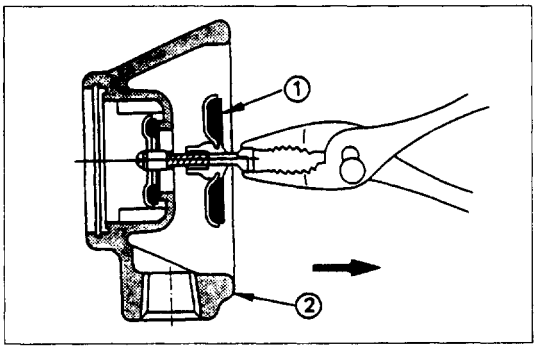

Poppet Valve Replacement

Poppet Valve Removal

Use a pliers to pull out the poppet valve ① from the valve body assembly ②.

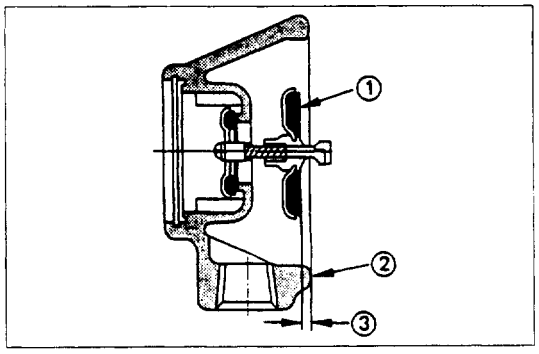

Poppet Valve Instllation

1. Install the poppet valve ① to the valve body assembly ②.
2. Use a scale to measure the poppet valve body and seat clearance ③.
3. Caulk the poppet valve.

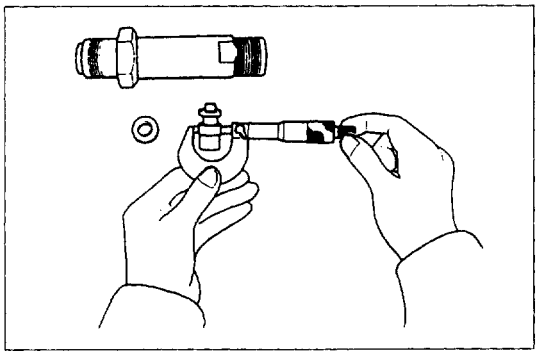

Hydraulic Piston

1. Use a micrometer to measure the hydraulic piston diameter.
2. Use an inside dial indicator to measure the cylinder bore.
3. Calculate the clearance between the cylinder and the piston.

Cylinder and Piston clearance	mm (in)
Limit	0.15 (0.006)

If the clearance exceeds the specified limit, the cylinder and the piston liner must be replaced.

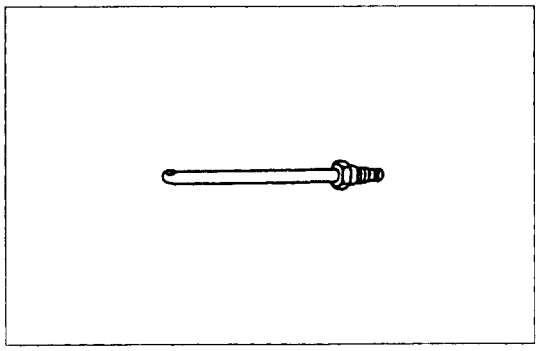

Push Rod

Visually inspect the push rod for corrosion and other damage.

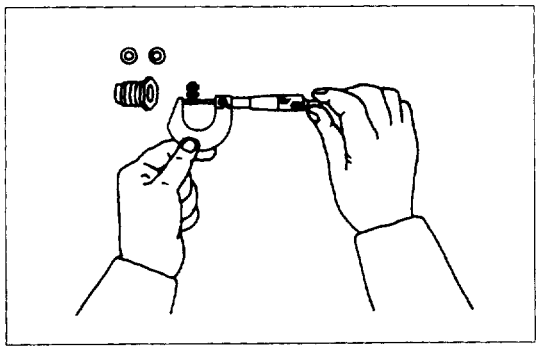

Fitting

Relay Valve Piston Assembly

1. Visually inspect the fitting inside surface for corrosion and other damage.
2. Use a micrometer to measure the relay valve piston diameter.
3. Use an inside dial indicator to measure the fitting inside diameter.
4. Calculate the clearance between the fitting and the piston.

Fitting and Piston clearance	mm (in)
Limit	0.1 (0.0039)

If the clearance exceeds the specified limit, the fitting and the piston must be replaced.

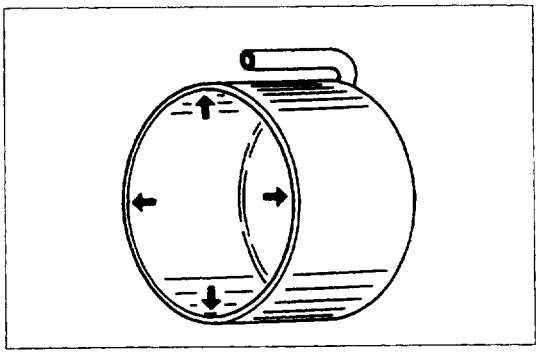

Cylinder Shell

Visually inspect the Cylinder shell bore for corrosion and other damage.

REASSEMBLY

Power Piston Assembly

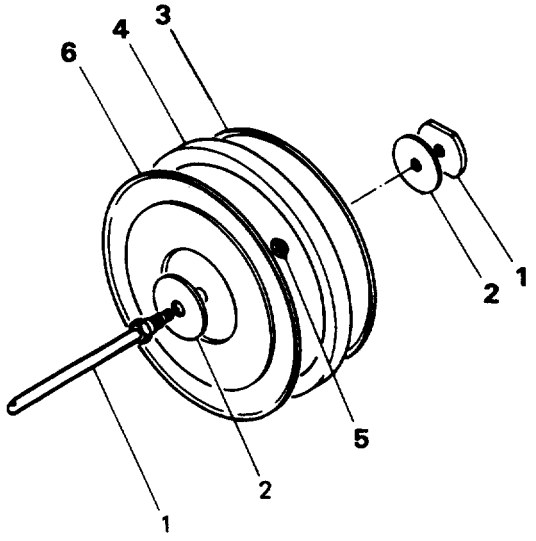

Reassembly Steps

1. Push rod
2. Washer
3. Plate
4. Gasket
5. Gasket
6. Plate
7. Washer
8. Nut

Reassembly Steps

1. **Push Rod**
2. **Washer**
3. **Plate**
4. **Gasket**
5. **Gasket**
6. **Plate**
7. **Washer**
8. **Nut**
   1. Clamp the push rod in a vice.
   2. Use a wrench to tighten the lock nut to the specified torque.

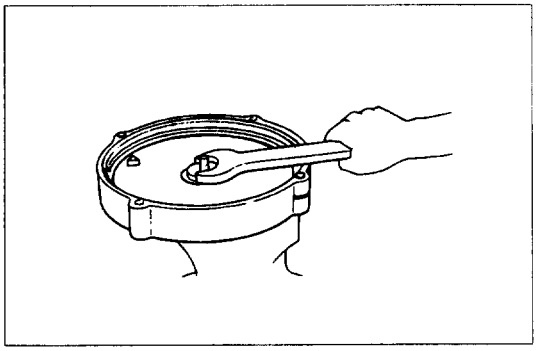

Lock Nut Torque	N·m (kg·m/lb·ft)
24.5 (2.5/18.1)	

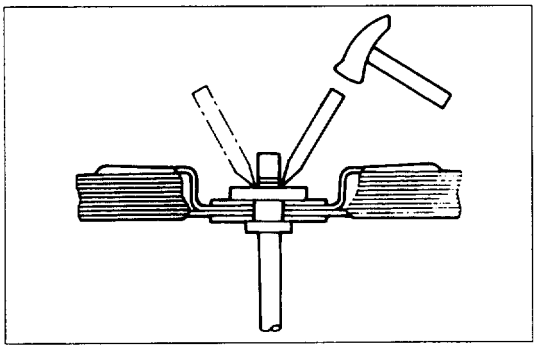

3. Caulk the lock nut at two positions to prevent from loosening.

End Plate Assembly

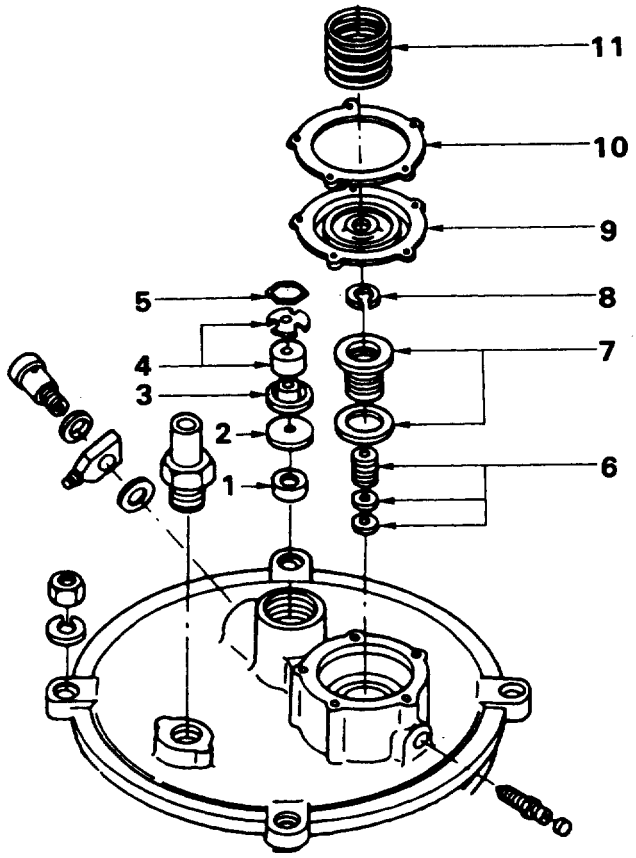

Reassembly Steps

1. Oil seal
2. Washer
3. Cup gasket
4. Retainer
5. Retaining ring
6. Relay valve piston assembly
7. Fitting
8. Retaining ring
9. Diaphragm assembly
10. Gasket
11. Spring

Reassembly Steps

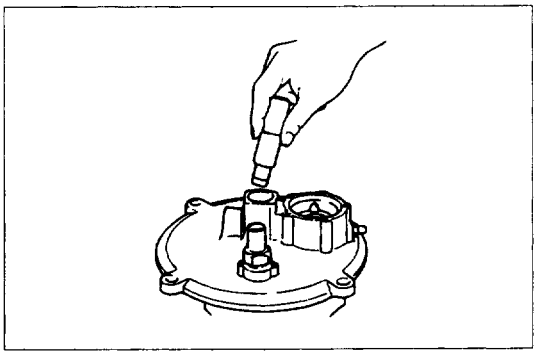

1. **Oil Seal**
   1. Apply a coat of silicon grease to the oil seal lip.
   2. Use an oil seal replacer and a hammer to install the oil seal.

      The oil seal lip must be facing the end plate.

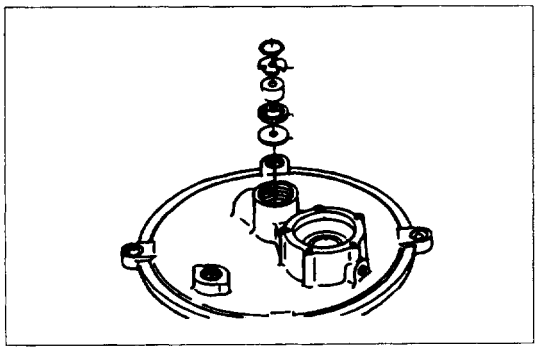

2. **Washer**
3. **Cup Gasket**
4. **Retainer**
5. **Retaining Ring**
   1. Install the washer, the cup gasket, and the retainer.
   2. Fix the washer, the cup gasket, and the retainer with the retaining ring.

      The side of the washer having wider chamfer must be facing up.

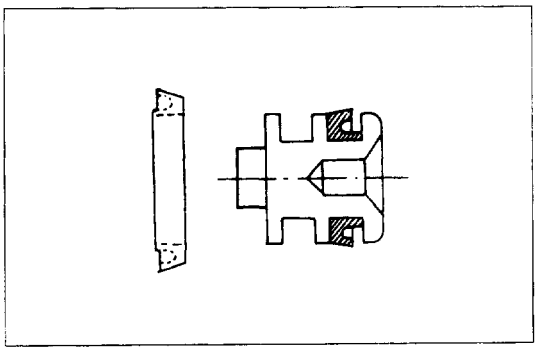

6. **Relay Valve Piston Assembly**
   1. Apply a coat of vacuum cylinder oil to the piston.
   2. Rinse the piston cup in clean brake fluid.
   3. Install the piston cup to the piston.
   4. Install the relay valve piston assembly to the fitting.

      The piston hole must be facing the retaining ring.

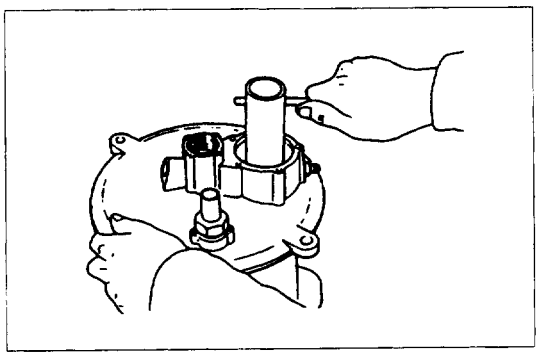

7. **Fitting**

   Use a box wrench to tighten the fitting to the specified torque.

Fitting torque	N·m (kg·m/lb·ft)
	44.1 (4.5/32.6)

Hydraulic Cylinder and Piston Assembly

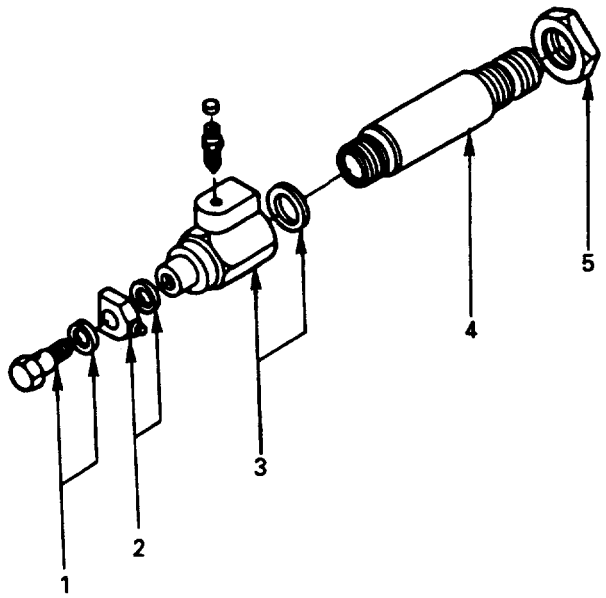

Reassembly Steps

1. Eye bolt
2. Eye connector
3. Cup and gasket
4. Cylinder
5. Lock nut

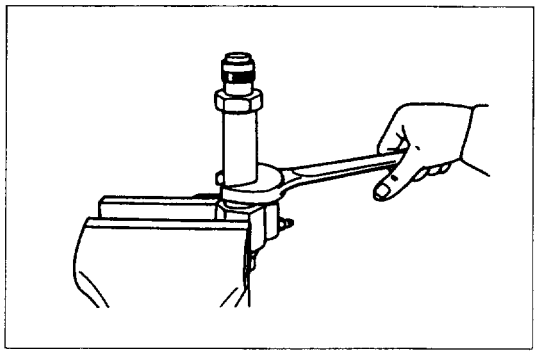

Reassembly Steps

1. **Eye Bolt**
2. **Eye Connector**
3. **Cup and Gasket**
4. **Cylinder**
   1. Clamp the cap in a vase.
   2. Install the gasket and the cylindert to the cup.
   3. Tighten the cylinder to the specified torque.

Cylinder torque	N·m (kg·m/lb·ft)
112.7 (11.5/ 83.2)	

5. **Lock Nut**

Valve Body Assembly

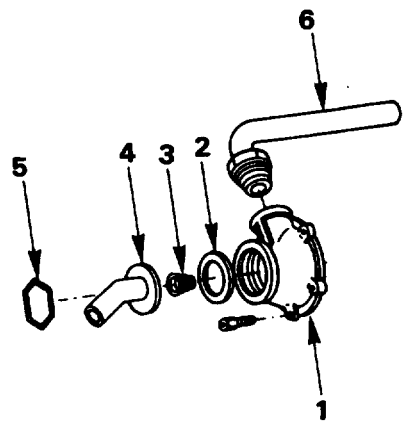

Reassembly Steps

1. Valve body
2. Washer
3. Spring
4. Pipe
5. Retaining ring
6. Elbow

Reassembly Steps

1. **Valve Body**
2. **Washer**
3. **Spring**
4. **Pipe**
5. **Retaining Ring**
6. **Elbow**

Hydromaster Assembly

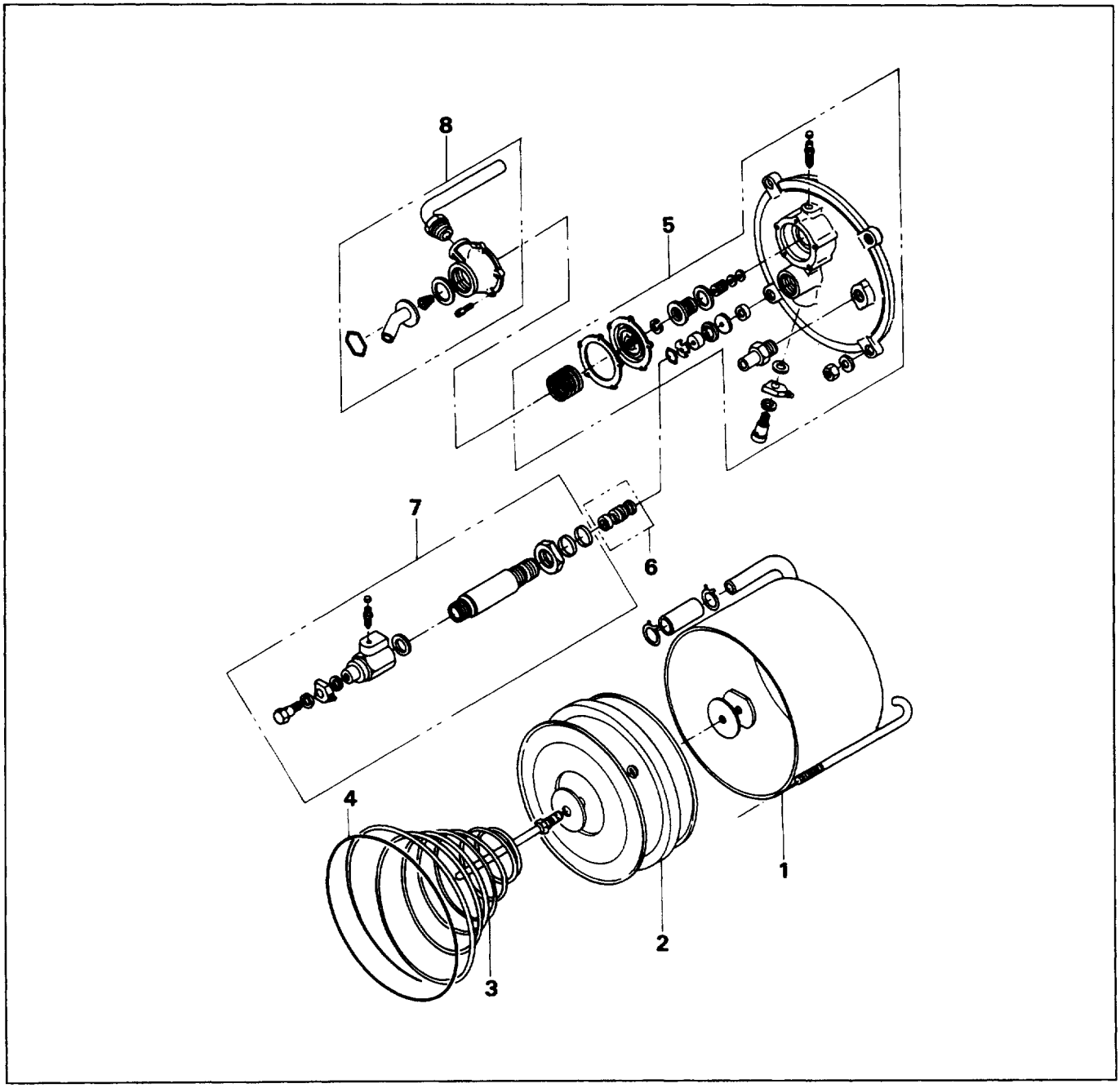

Reassembly Steps

1. Cylinder shell
2. Power piston assembly
3. Return spring
4. O-ring
5. End plate assembly
6. Hydraulic piston assembly
7. Hydraulic cylinder assembly
8. Valve body assembly

Reassembly Steps

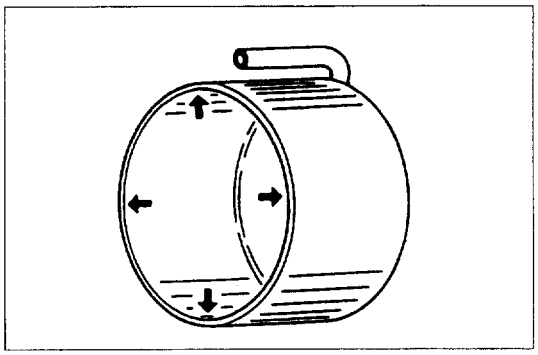

1. Cylinder Shell

1. Clean the cylinder shell bore.
2. Apply a coat of Airmaster paste to the entire cylinder shell bore.

   This will allow the piston to move smoothly and will prevent rust formation.

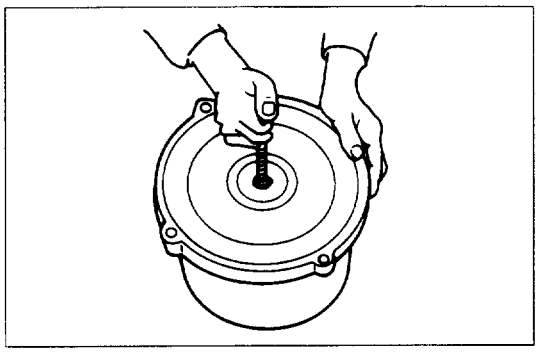

2. Power Piston Assembly

1. Apply a coat of Airmaster paste to the entire outside circumference of the power piston assembly.
2. Install the power piston assembly to the cylinder shell.

   Take care not to scratch the rubber gasket.

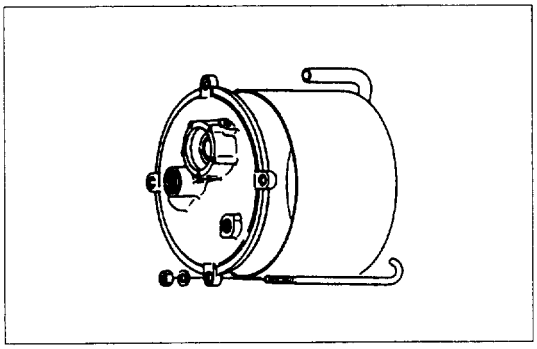

3. Return Spring

4. O-ring

5. End Plate Assembly

1. Apply a coat of Airmaster paste to the O-ring.
2. Align the setting marks applied to the cylinder shell and the end plate assembly.
3. Tighten the end plate assembly to the specified torque.

End Plate Assembly Torque	N·m (kg·m/lb·ft)
6.86 (0.7/ 5.1)	

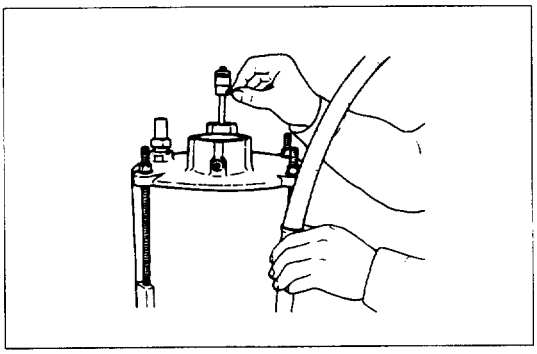

6. Hydrolic Piston Assembly

1. Apply compressed air from the control pipe to the hydromaster to raise the push rod.
2. Install the hydraulic piston assembly to the push rod.
3. Install the pin to fix the hydraulic piston assembly and the push rod.
4. Stop the compressed air.
5. Check that the hydraulic piston is correctly seated at the end plate.

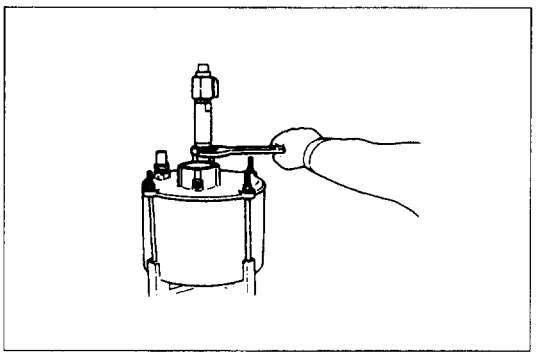

7. Hydraulic Cylinder Assembly

1. Install the hydraulic cylinder assembly to the end plate assembly.
2. Tighten the lock nut to the specified torque.
   The air bleeder must be facing up.

Fitting Torque	N·m (kg·m/lb·ft)
63.7 (6.5/ 47.0)	

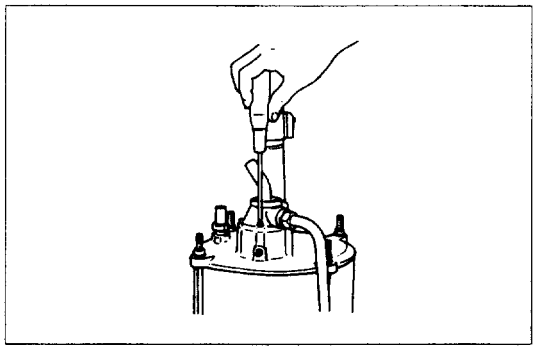

8. Valve Body Assembly

Install the valve body to the end plate.
The valve body pipe must be facing the control tube.

SAFETY VALVE

DISASSEMBLY

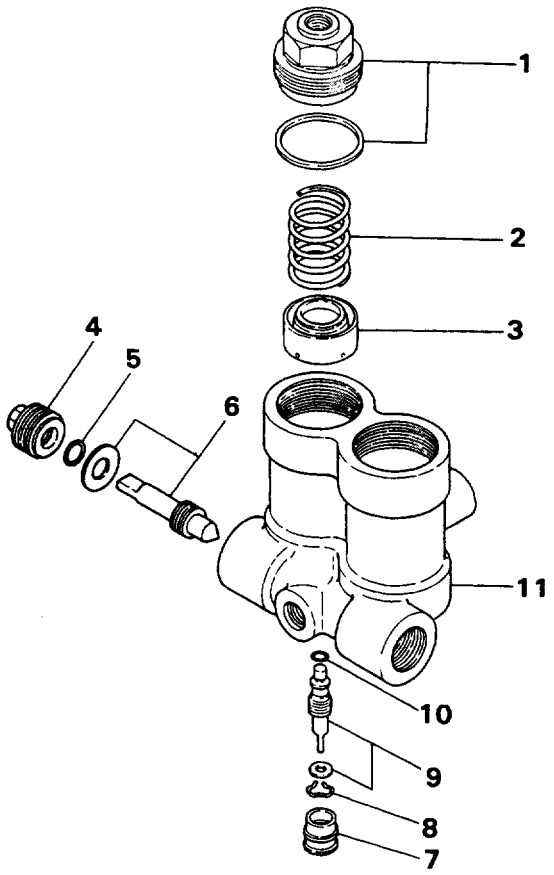

Disassembly Steps

1. Cylinder cap
2. Spring
3. Piston
4. Nut; check bolt
5. O-ring
6. Check bolt
7. Boot
8. Snap ring
9. Air bleeding bolt
10. O-ring
11. Cylinder body

Disassembly Steps

1. **Cylinder Cap**
2. **Spring**
3. **Piston**
4. **Nut; Check Bolt**
5. **O-ring**
6. **Check Bolt**
7. **Boot**
8. **Snap Ring**
9. **Air Bleeding Bolt**
10. **O-ring**

INSPECTION AND REPAIR

Make the necessary adjustments, repairs, and part replacements if excessive wear or damage is discovered during inspection.

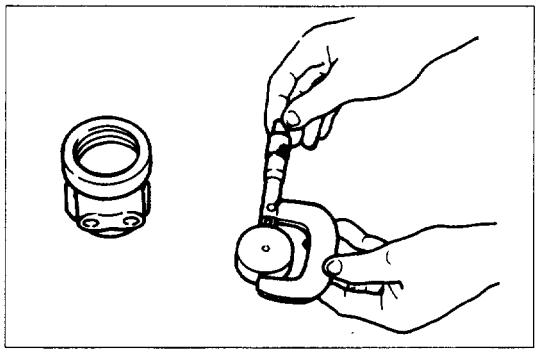

Piston and Cylinder Body Clearance

1. Use a micrometer to measure the piston diameter.
2. Use an inside dial indicator to measure the cylinder body bore.
3. Calculate the clearance between the piston and the cylinder body bore.

   If the clearance exceeds the specified limit, the safety valve must be replaced as an assembly.

Piston and Cylinder Body Clealance — mm (in)

Limit	0.17 (0.0067)

REASSEMBLY

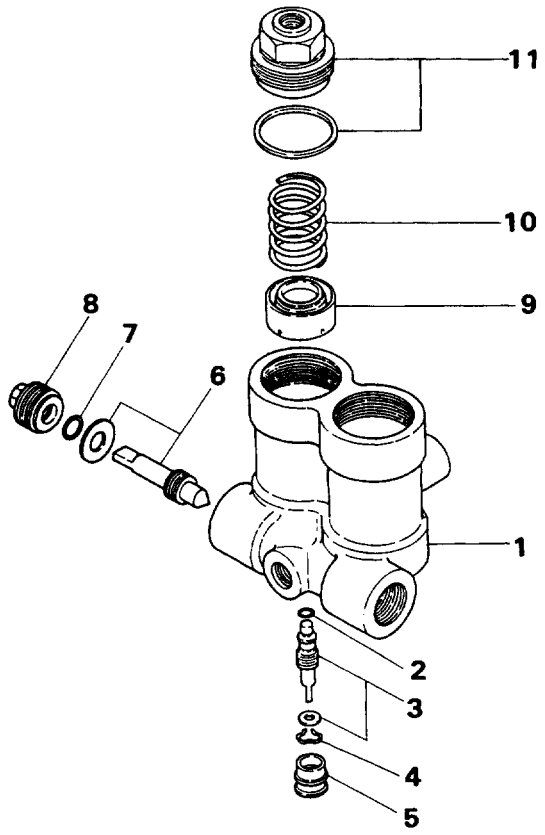

Reassembly Steps

1. Cylinder Body
2. O-ring
3. Air Bleeding Bolt
4. Snap Ring
5. Boot
6. Check Bolt
7. O-ring
8. Nut; Check Bolt
9. Piston
10. Spring
11. Cylinder Cap

Reassembly Steps

1. **Cylinder Body**
2. **O-ring**
3. **Air Bleeding Bolt**
4. **Snap Ring**
5. **Boot**
6. **Check Bolt**
7. **O-ring**
8. **Nut; Check Bolt**

   Tighten the nuts to specified torque.

Nut Torque	N·m (kg·m/lb·ft)
88 (9.0/65)	

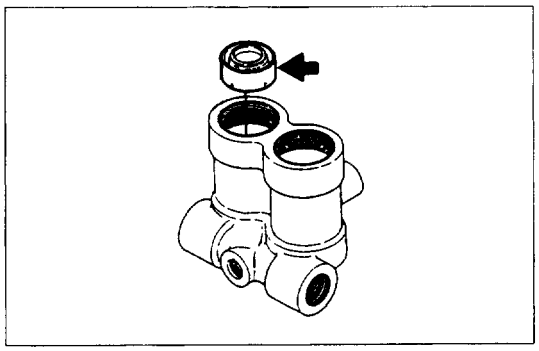

9. **Piston**

   Apply brake fluid to the piston and cylinder body bore before installing the piston.

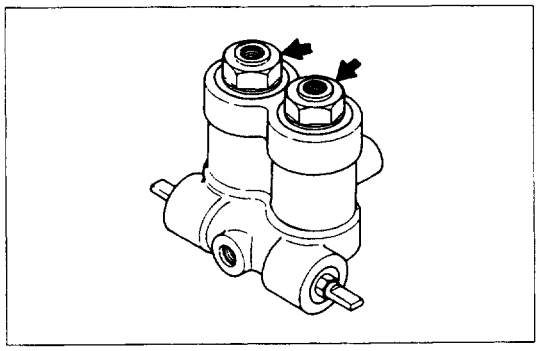

10. **Cylinder Cap**

    Tighten the cylinder caps to specified torque.

Cylinder Cap Torque	N·m (kg·m/lb·ft)
255 (26.0/188)	

SECTION 5C
PARKING BRAKES

CONTENTS

PAGE

General Description 5C- 2
On-Vehicle Service 5C- 3
Removal 5C- 3
Installation 5C- 5
Unit Repair [178 mm, 190 mm Type] 5C- 9
Disassembly 5C- 9
Inspection and Repair 5C-11
Reassembly 5C-13
Unit Repair [203 mm, 254 mm Type] 5C-15
Disassembly 5C-15
Inspection and Repair 5C-17
Reassembly 5C-18

GENERAL DESCRIPTION

Parking Brake Assembly

178 mm Type

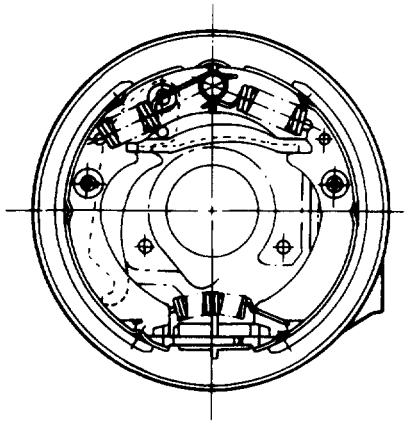

190 mm Type

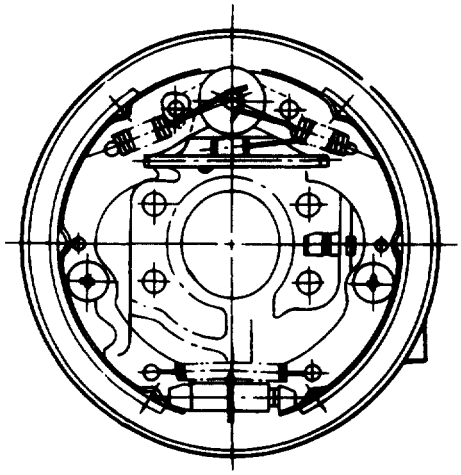

203 mm Type

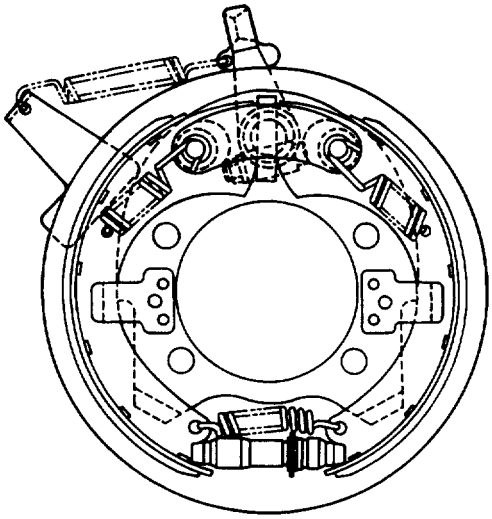

254 mm Type

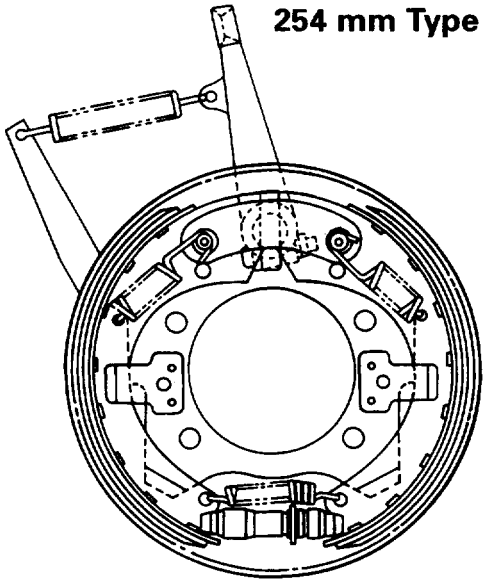

The parking brake is a mechanically operated internal- expanding type drum brake. It is mounted on the rear of the transmission case.

The control cable is routed into the vehicle cab where it is connected to the parking brake lever.

ON-VEHICLE SERVICE

REMOVAL

Parking Brake System Replacement

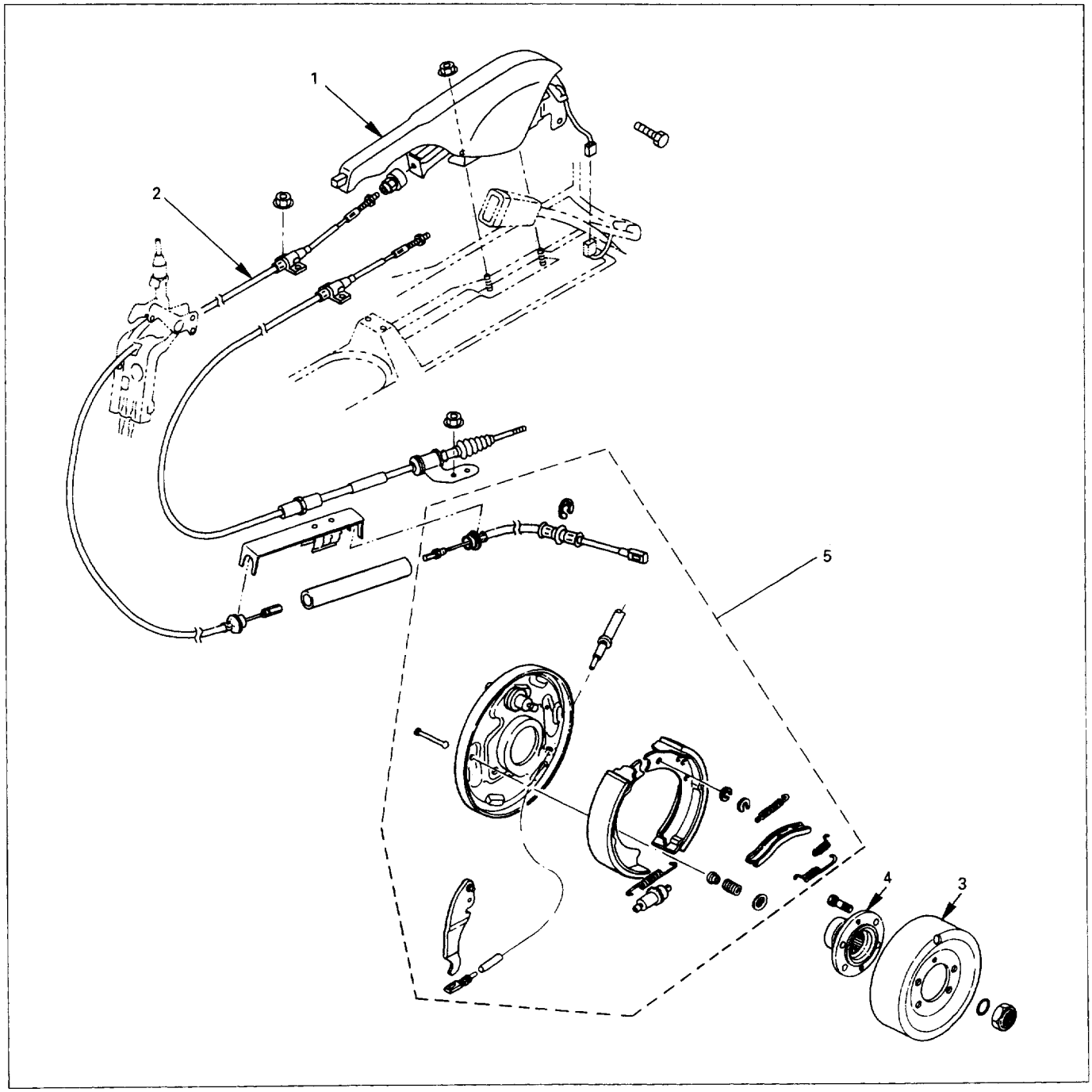

Removal Steps

1. Parking brake lever assembly
2. Parking brake cable front
3. Brake drum
4. Drive coupling
5. Parking brake assembly

Removal Steps

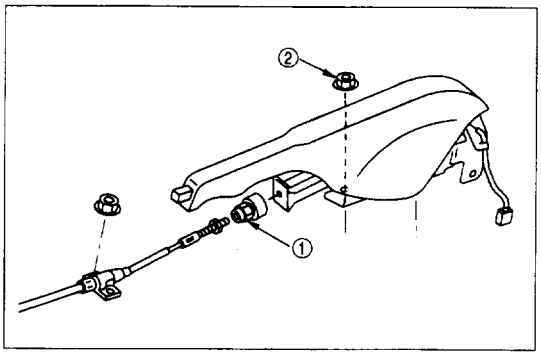

1. **Parking Brake Lever Assembly**
   1. Loosen the adjusting nut ① to disconnect the parking brake cable from the lever.
   2. Loosen the retaining nut ② to remove the parking brake assembly.

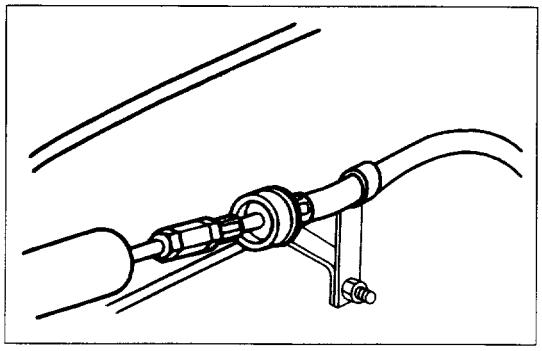

2. **Parking Brake Cable Front**
   1. Remove the clip ① and move the cover ② towards the front end of the vehicle.
   2. Remove the connecting bracket and move the cover towards the vehicle front.

      Loosen and remove the nut connecting the front cable to the rear cable.

3. **Brake Drum**
4. **Drive Coupling**

   Refer to "Transmission Removal and Installation" in Section 7.
5. **Parking Brake Assembly**

INSTALLATION

Parking Brake System Replacement

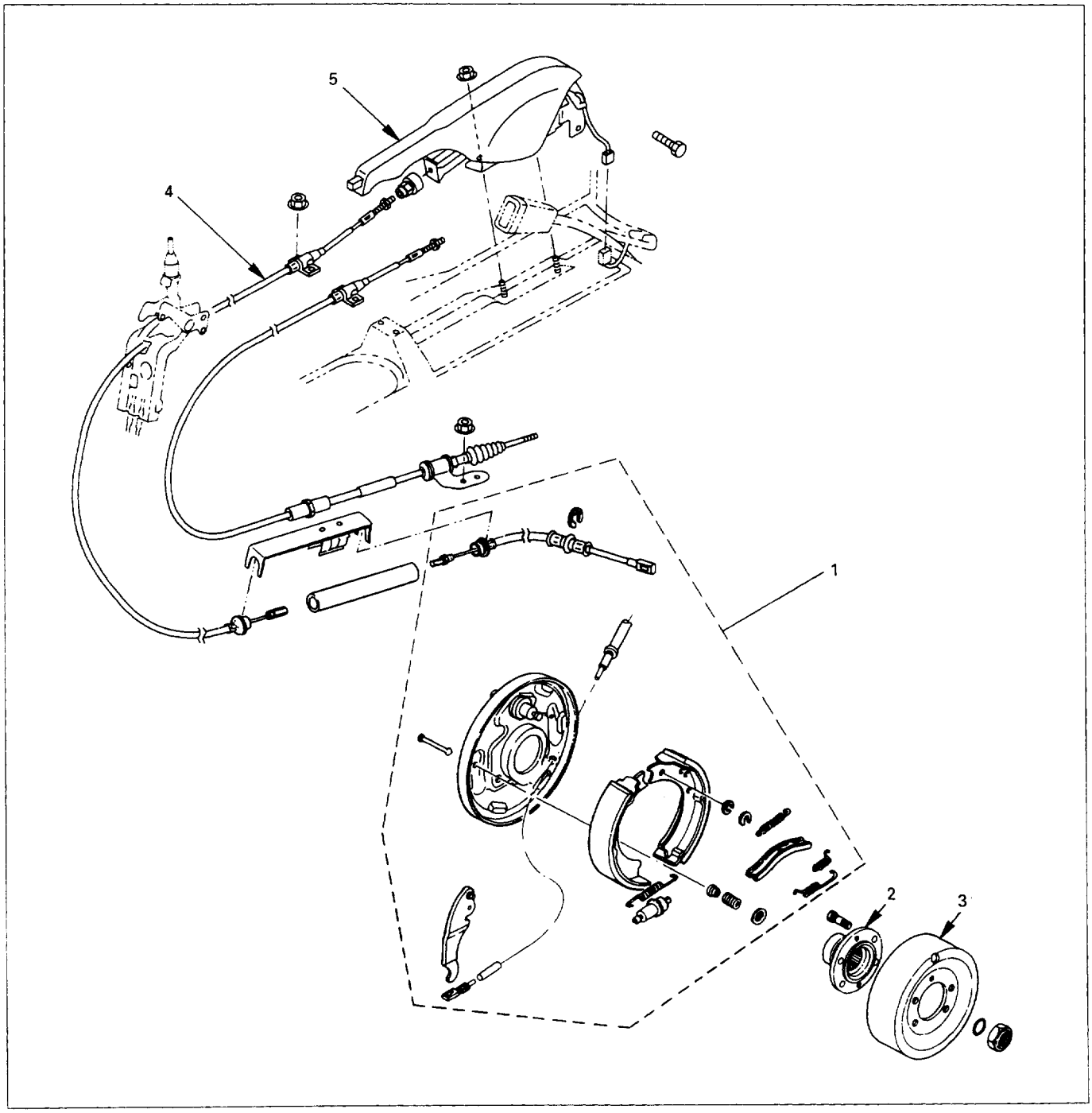

Installation Steps

1. Parking brake assembly
2. Drive coupling
3. Brake drum
4. Parking brake cable front
5. Parking brake lever assembly

Installation Steps

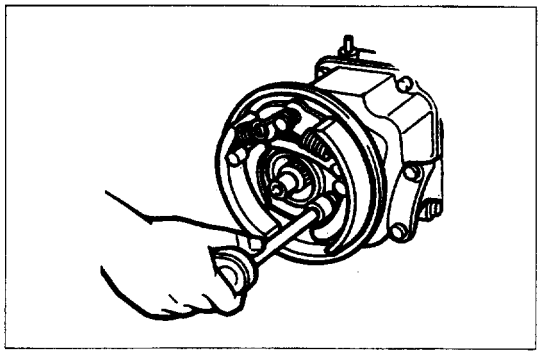

1. **Parking Brake Assembly**

Parking Brake Fixing Bolt Torque		N·m (kg·m/lb·ft)
JR403E (A/T) MSA, MXA,	—	83 (8.5 / 61)
MSB	M12 Nut	113 (11.5 / 83)
	M8 Bolt	25 (2.6 / 19)
MBP	—	123 (12.5 / 90)

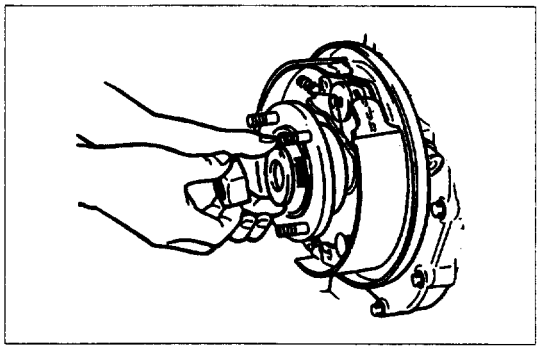

2. **Drive Coupling**
   1. After tightening the parking brake fixing bolts to the transmission, install the coupling driver, new O-ring, conical spring (Except A/T) and new lock nut.
   2. The grooved side of conical spring should be faced to the lock nut.

Drive Coupling Lock Nut Torque	N·m (kg·m/lb·ft)
MSA, MSB, MXA	226 (23.0 / 166)
JR403E (A/T)	284 (29.0 / 210)
MBP	588 (60 / 434)

   3. Align the lock nut with the V-shaped groove at the tip of the main shaft, and caulk the nut lip portion at two spots with a chisel. (Round edge 1 mm x 60g)

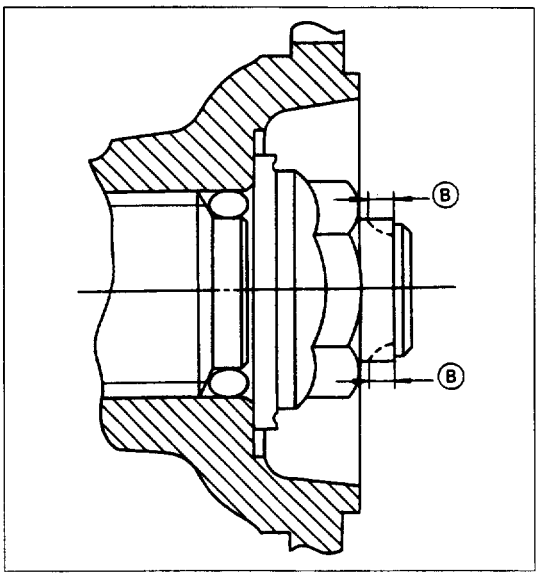

As shown in the illustration, be sure to caulk the nut lip so that the clearance between the V-shaped groove portion at the tip of the main shaft and the caulked nut lip Ⓐ is less than 1.5 mm (0.06 in.), and the caulking length Ⓑ is 5 mm (0.2 in.) or more.

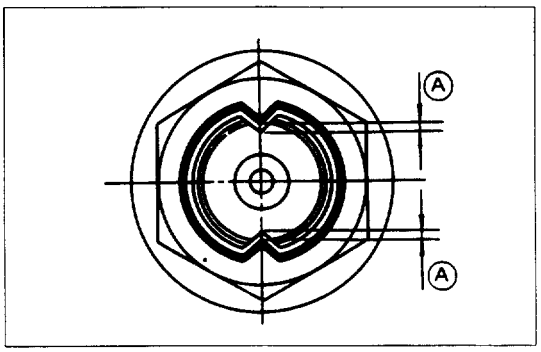

NOTE:

Be sure to confirm that there is no crack at the caulked portion of the nut after caulking.

3. **Brake Drum**
4. **Parking Brake cable Front**

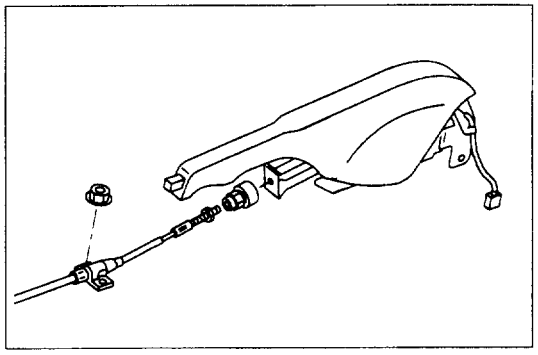

5. **Parking Brake Lever Assembly**
   Install the parking brake cable to the brake lever.

Parking Brake Adjustment

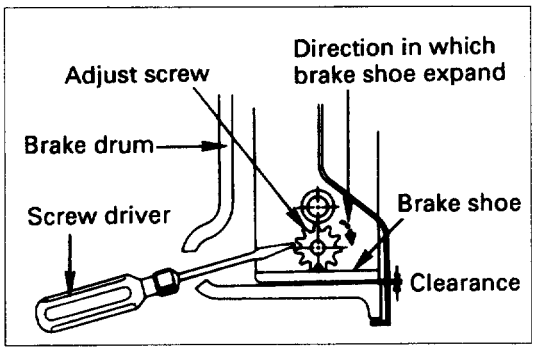

Brake Shoe Clearance Adjustment

1. Move the lever from side to side 3 or 4 times to properly center the brake shoes.
2. With a screw driver turn adjuster upward until the brake drum drags.
3. Back off the adjusting screw the specified number of notches.

Adjusting Screw Notches and Clearance

Brake Type	Notches	Clearance mm(in)
178 mm, 190 mm	30	0.75 (0.029)
203 mm, 254 mm	8	0.23 (0.009)

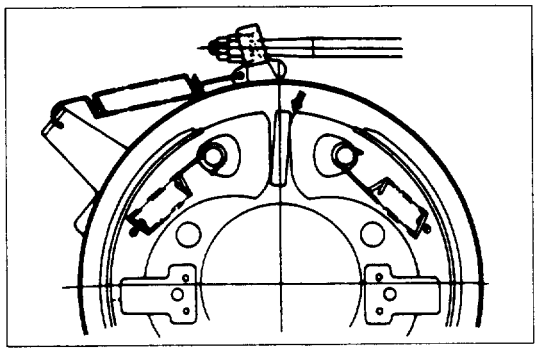

Cam Clearance [203 mm, 254 mm Type]

When connecting cable with cam shaft lever, use adjust nut in order to make the clearance 0 mm (0 in) between cam and shoe, then lock adjust nut with lock nut.

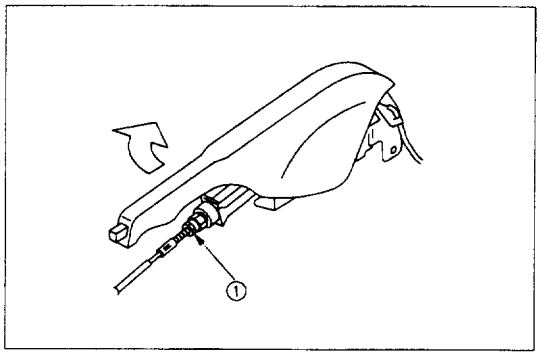

Parking Brake Lever Travel Adjustment

1. Fully set the parking brake lever and release it several times.

   Leave the parking brake lever in the released position.
2. Loosen the parking brake cable lock nut ①.
3. Turn the adjuster ② to adjust the lever travel to the specified notches.

Parking brake lever travel at 147N (15kg/33lbs) notches.

5 - 8

4. Retighten the cable lock nut ①.
5. Check the parking brake lever travel (measured in notches).

UNIT REPAIR [178 MM, 190MM TYPE]
DISASSEMBLY

Parking Brake Assembly

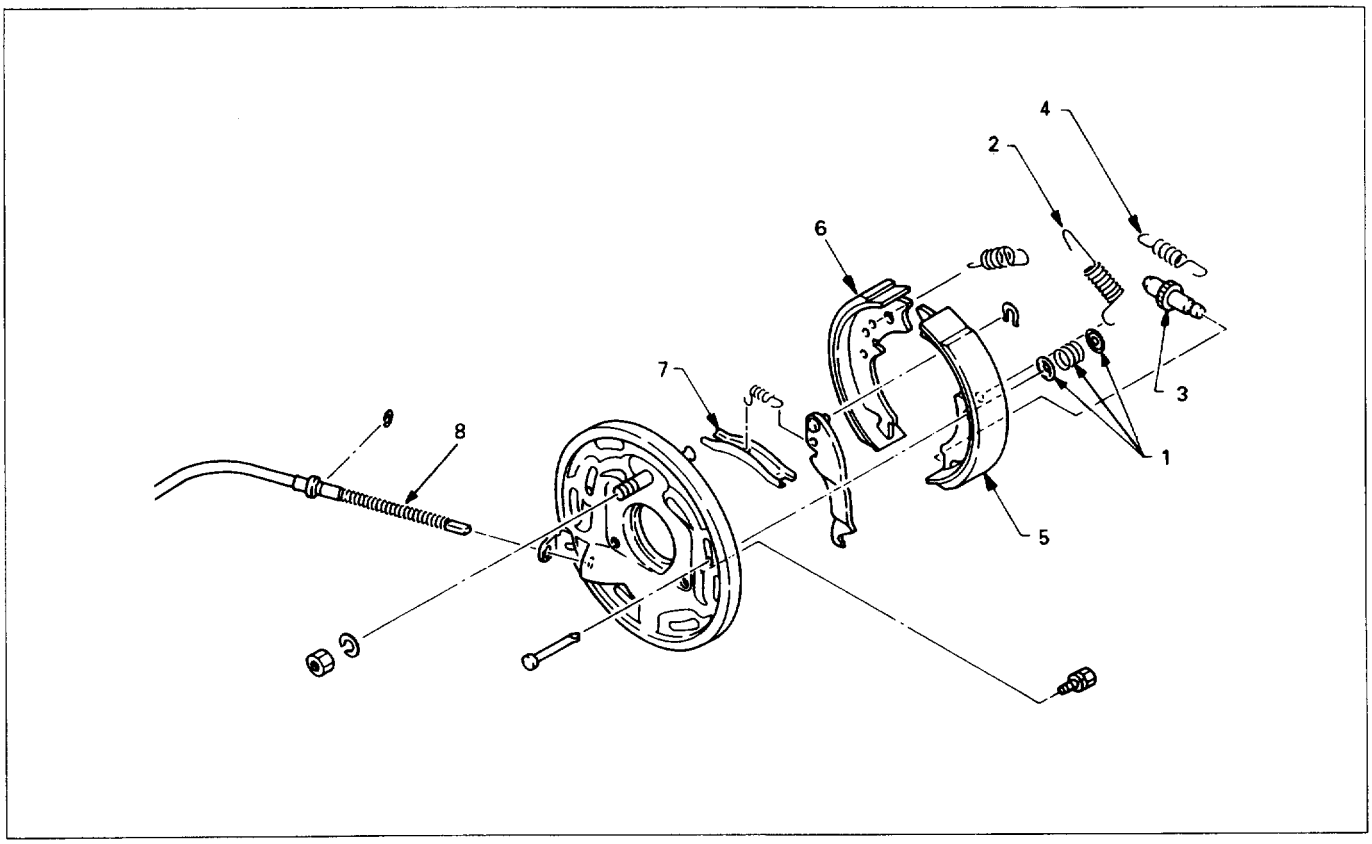

Disassembly Steps

1. Holding spring
2. Return spring
3. Adjuster assembly
4. Spring; adjuster
5. Secondary brake shoe assembly with lever
6. Primary brake shoe assembly
7. Strut
8. Parking cable rear

Disassembly Steps

1. Holding Spring
2. Return Spring
3. Adjuster Assembly
4. Spring; Adjuster
5. Secondary Brake Shoe Assembly
6. Primary Brake Shoe Assembly
7. Strut
8. Parking Cable Rear

INSPECTION AND REPAIR

Make the necessary adjustments, repairs, and part replacements if excessive wear or damage is discovered during inspection.

Brake drum
Brake linings
Return spring
Parking brake lever assembly
Parking brake inner cable

Visual check

Inspect the following parts for wear, corrosion, scuffs, scratches, deterioration or other abnormal conditions.

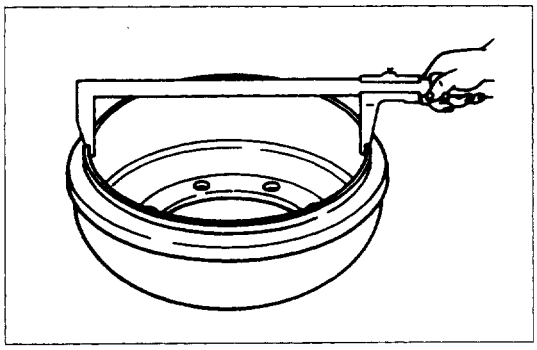

Brake Drum

Use a vernier caliper to measure the brake drum inside diameter.

If the measured value exceeds the specified limit, the brake drum must be replaced.

Brake Drum Inside Diameter — mm(in)

	Standard	Limit
Inside diameter	178 (7.01) 190 (7.48)	179 (7.05) 191 (7.52)
Out of round	0.05 (0.0020) or less	–

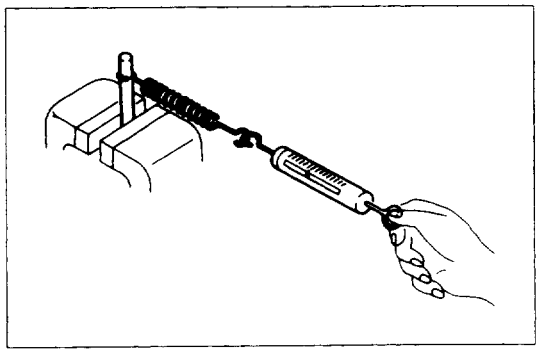

Return Spring

Use a spring balancer to measure the return spring set load.

If the variation exceeds 10% of the specified value, the return spring must be replaced.

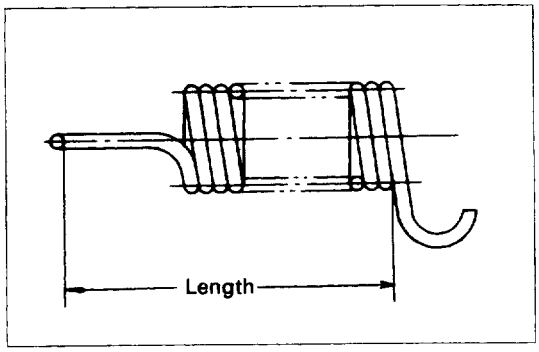

		Drum inside dia, mm(in)	
		178 (7.01)	190 (7.48)
Free length: mm(in)	Primary Secondary	62 (2.44) 49 (1.93)	62.1 (2.44)
Set length: mm(in)	Primary Secondary	70 (2.76) 57 (2.24)	67.1 (2.64)
Set load; kg(lb./N)	Primary	10.8 - 13.2 (23.8 - 29.1/ 105.9 - 129.5)	5.4 - 6.6 (11.9 - 14.6/ 53 - 65.7)
	Secondary	9.0 - 11.0 (19.8 - 24.3/ 88.3 - 107.8)	

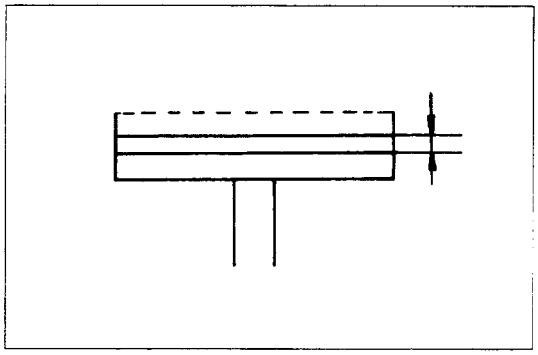

Brake Lining Thickness

Use a vernier caliper to measure the brake lining thickness.

If the measured value is less than the specified limit, the brake shoe assembly must be replaced.

Brake Lining Thickness	mm(in)
Limit	1.0 (0.039)

REASSEMBLY

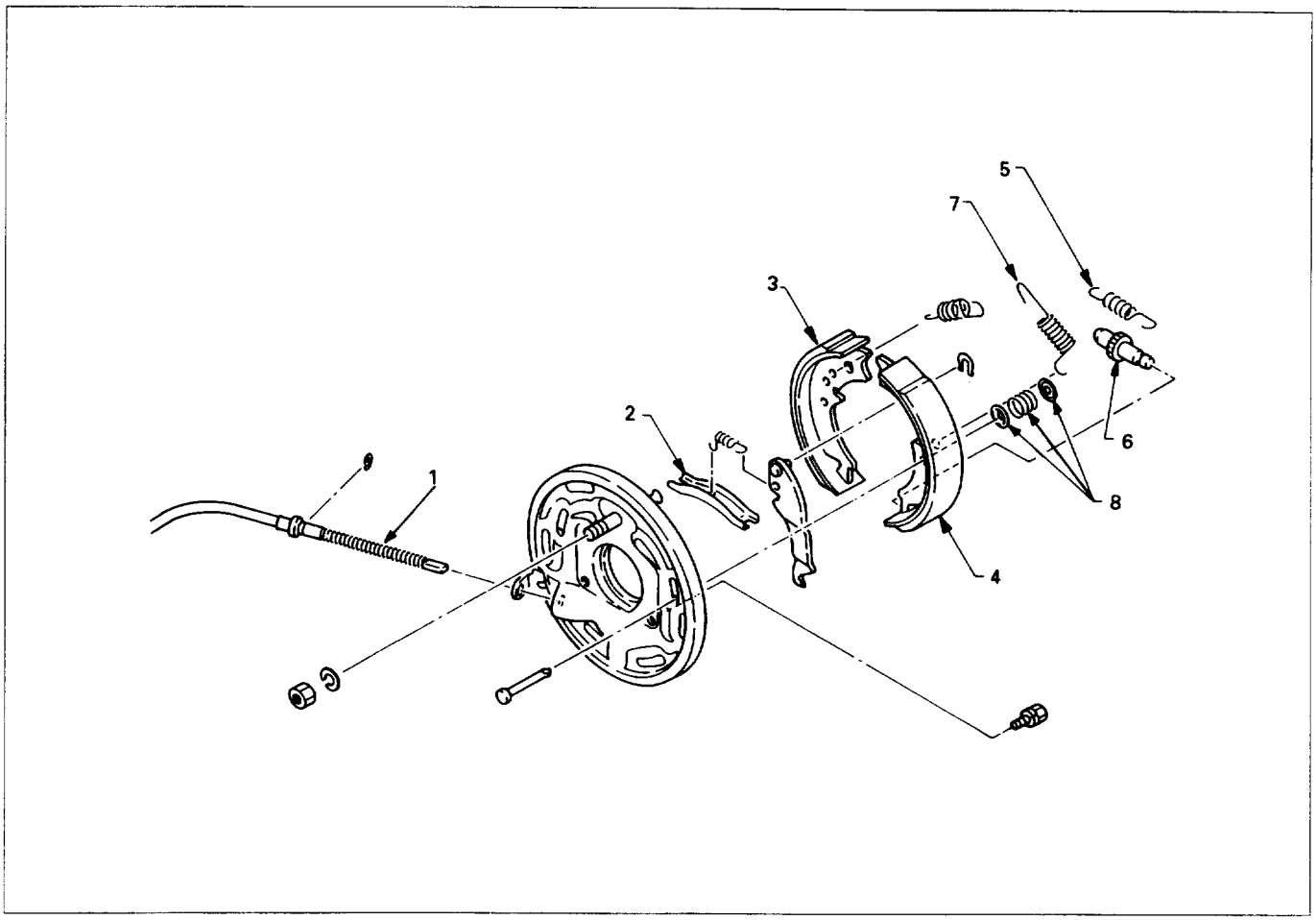

Reassembly Steps

1. Parking cable rear
2. Strut
3. Primary brake shoe assembly
4. Secondary brake shoe assembly
5. Spring; adjuster
6. Adjuster assembly
7. Return spring
8. Holding spring

Reassembly Steps

1. **Parking Cable Rear**
2. **Strut**
3. **Primary Brake Shoe Assembly**
4. **Secondary Brake Shoe Assembly**

Install the brake shoes by fitting them properly into slot in the adjuster and strut.

5. **Spring; Adjuster**
6. **Adjuster Assembly**
7. **Return Spring**

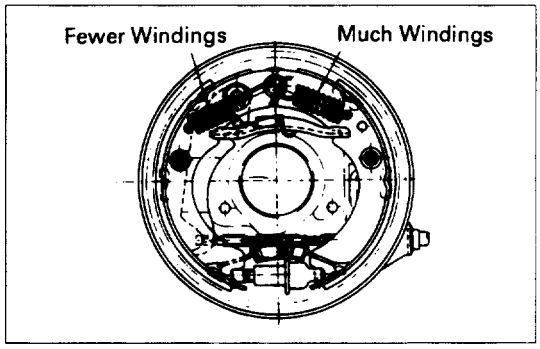

Drum inside diameter 178ø only

Attach the return spring bauing fewer windings at the primary side as illustrated.

8. **Holding Spring**

UNIT REPAIR [203 MM, 254MM TYPE]
DISASSEMBLY

Parking Brake Assembly

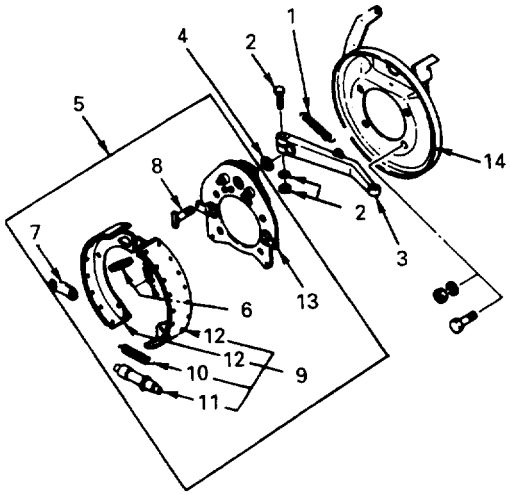

Disassembly Steps

1. Spring
2. Nut, spring washer and bolt
3. Lever
4. Washer
5. Brake shoe and support plate
6. Return spring
7. Anchor pin brace
8. Camshaft
9. Brake shoe assembly
10. Spring: adjuster
11. Adjusting screw
12. Brake shoe
13. Support plate
14. Dust cover

Disassembly Steps

1. **Spring**
2. **Nut, Spring Washer and Bolt**
3. **Lever**
4. **Washer**
5. **Brake Shoe and Support Plate**
6. **Return Spring**
   Remover: 9-8523-1554-0

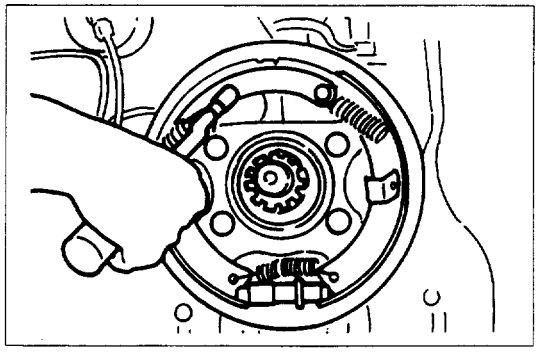

7. **Anchor Pin Brace**
8. **Camshaft**
9. **Brake Shoe Assembly**
10. **Spring: adjuster**
11. **Adjusting Screw**
12. **Brake Shoe**
13. **Support Plate**
14. **Dust Cover**

INSPECTION AND REPAIR

Make the necessary adjustments, repairs, and part replacements if excessive wear or damage is discovered during inspection.

Brake drum
Brake linings
Return spring
Parking brake lever assembly
Parking brake inner cable

Visual check

Inspect the following parts for wear, corrosion, scuffs, scratches, deterioration or other abnormal conditions.

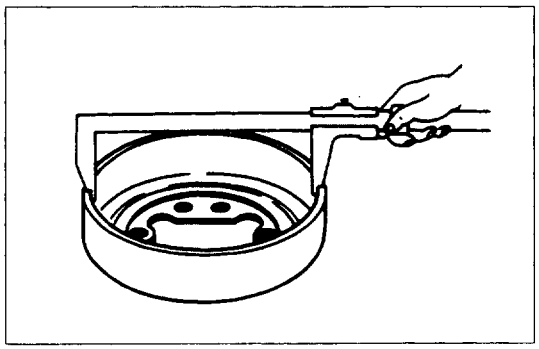

Brake Drum

mm(in)

	Standard	Limit
Brake drum size inside diameter	203 (8.00)	205 (8.07)
	254 (10.0)	256 (10.08)
Uneven wear and or score	Run out 0.05 (0.002) or less	

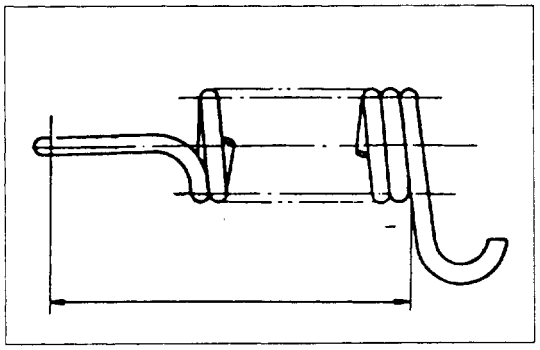

Return Spring

mm(in)

Brake drum size		203 (8.00)	254 (10.0)
Free length		49.9 (1.965)	68 (2.677)
Set load	N (kg / lb)	147 (15 / 33.07)	181 (18.5 / 40.79)
Set length		57.5 (2.264)	75 (2.953)

Note: A/T . . . Automatic Transmission

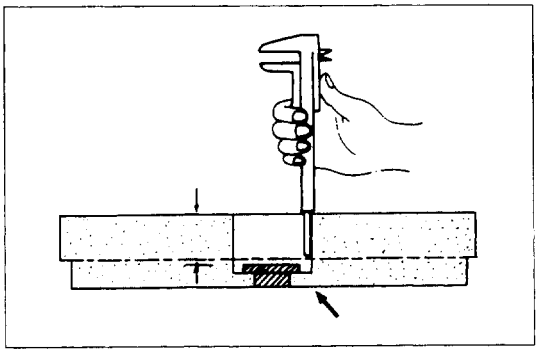

Brake Lining

Clearance to Rivet Head [254 mm Type] mm(in)

Limit	0.5 (0.0197)

Brake Lining Thickness [203 mm Type] mm(in)

Limit	1.0 (0.039)

REASSEMBLY

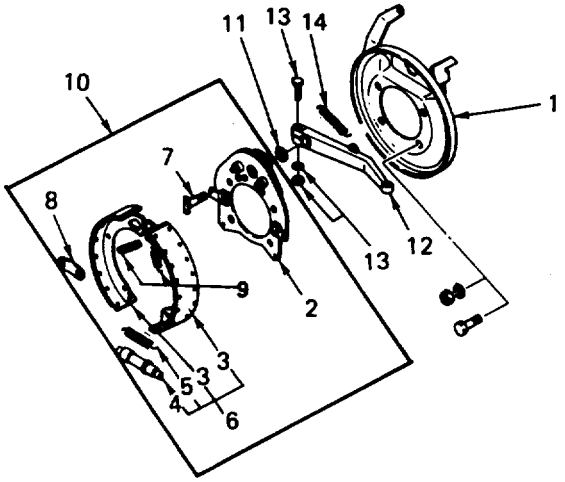

Reassembly Steps

1. Dust cover
2. Support plate
3. Brake shoe
4. Adjusting screw
5. Spring: adjuster
6. Brake shoe assembly
7. Camshaft
8. Anchor pin brace
9. Return spring
10. Brake shoe and support plate
11. Washer
12. Lever
13. Bolt, spring washer and nut
14. Spring

Reassembly Steps

1. **Duct Cover**
2. **Support Plate**

Bolt Torque	N·m (kg·m / lb·ft)
123 (12.5 / 90)	

3. **Brake Shoe**
4. **Adjusting Screw**
5. **Spring: adjuster**
6. **Brake Shoe Assembly**
7. **Camshaft**
8. **Anchor Pin Brace**
9. **Spring**

   Spring installer: 9-8523-1554-0

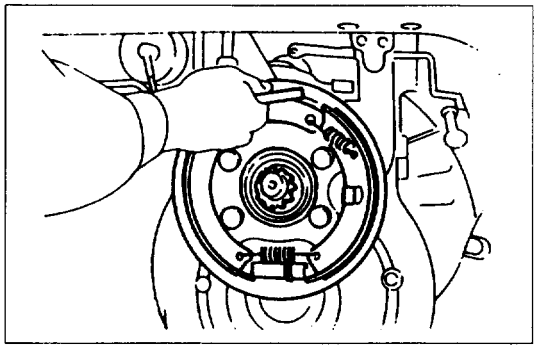

10. **Brake Shoe and Support Plate**
11. **Washer**
12. **Lever**
13. **Bolt, Spring Washer and Nut**
14. **Spring**

SECTION 5E
EXHAUST BRAKE

CONTENTS

	PAGE
General Description	5E-2
On-Vehicle Service	5E-3
Removal	5E-3
Installation	5E-4
Unit Repair	5E-6
Disassembly	5E-6
Inspection and Repair	5E-7
Reassembly	5E-8

GENERAL DESCRIPTION

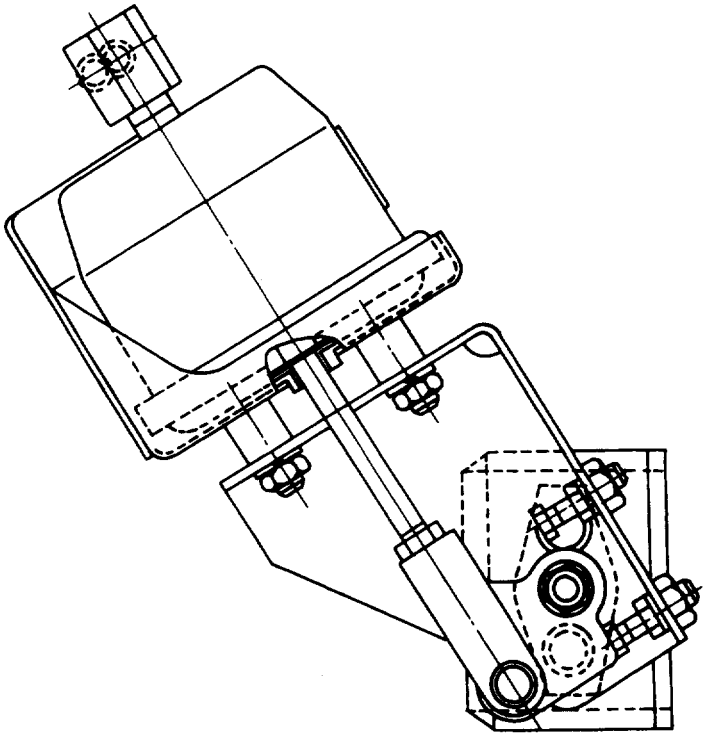

ON-VEHICLE SERVICE

REMOVAL

Exhaust Brake Assembly

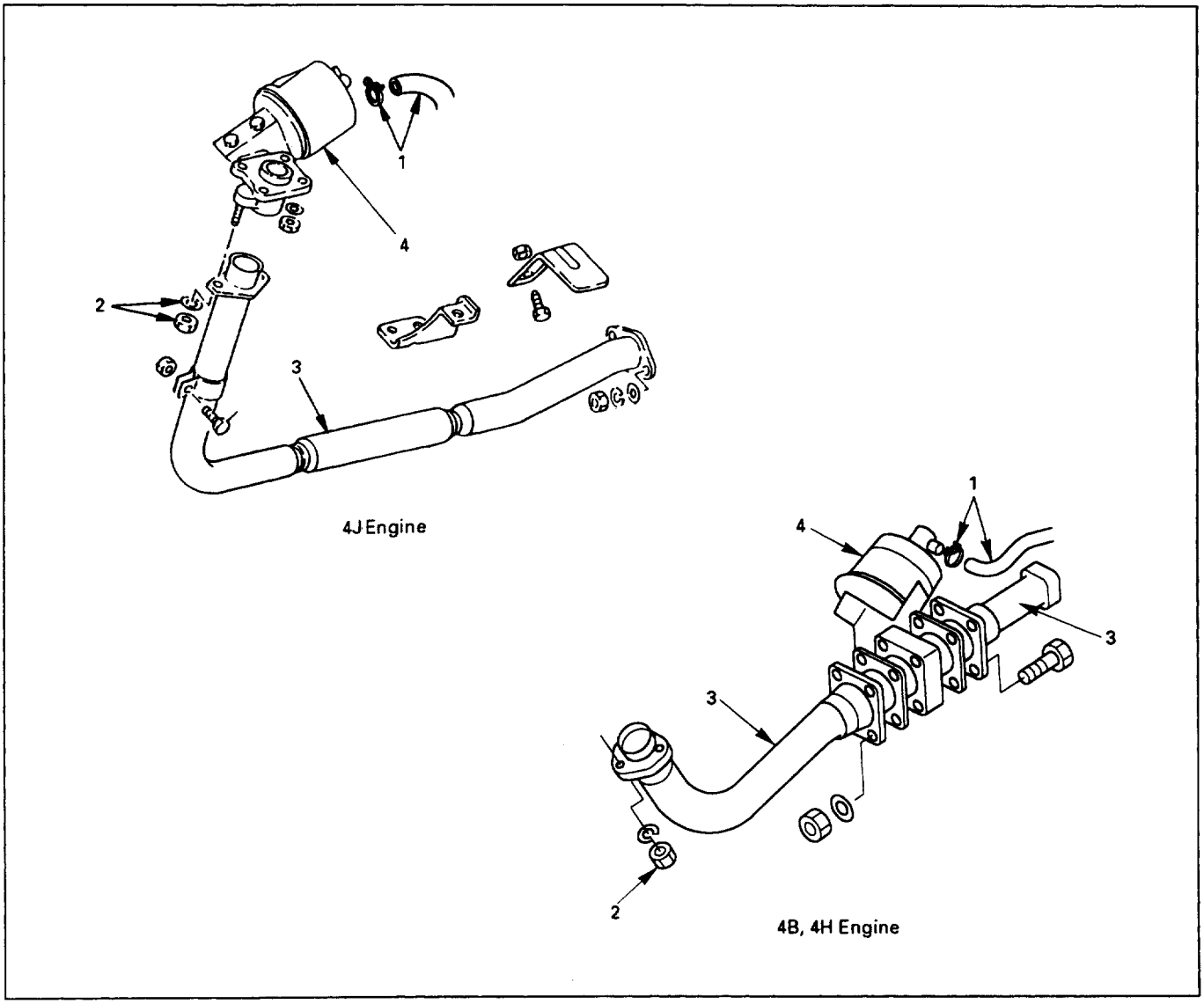

Removal Steps

1. Vacuum hose and clip
2. Flange nut
3. Exhaust pipe
4. Exhaust brake unit

Removal Steps

1. **Vacuum Hose and Clip**
2. **Nut**
3. **Exhaust Pipe**
4. **Exhaust Brake Unit**

INSTALLATION

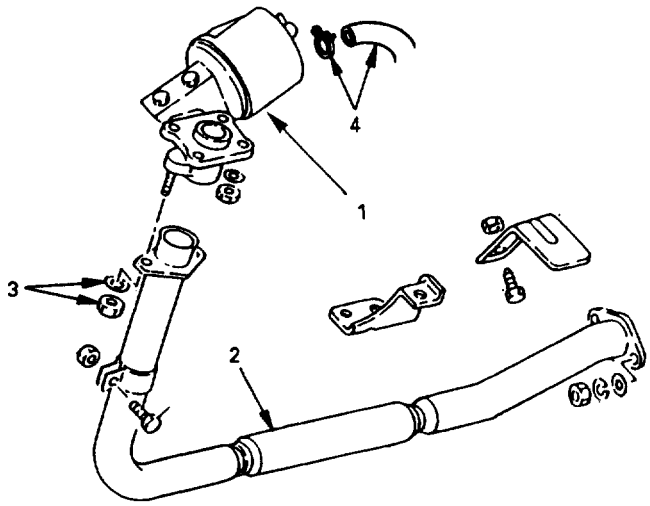

4J Engine

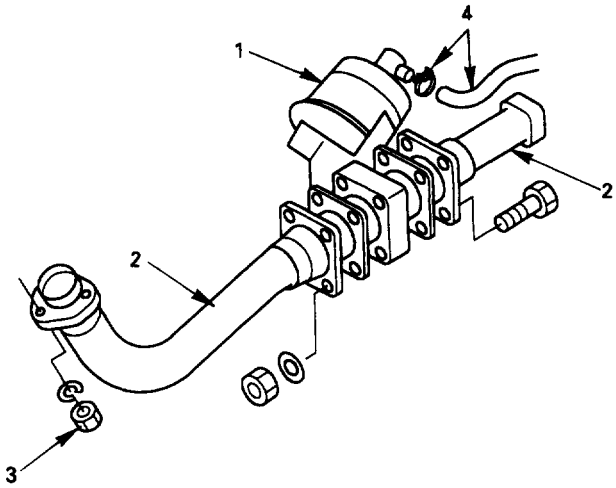

4B, 4H Engine

Installation Steps

1. Exhaust brake unit
2. Exhaust pipe
3. Flange nut
4. Vacuum hose and clip

Installation Steps

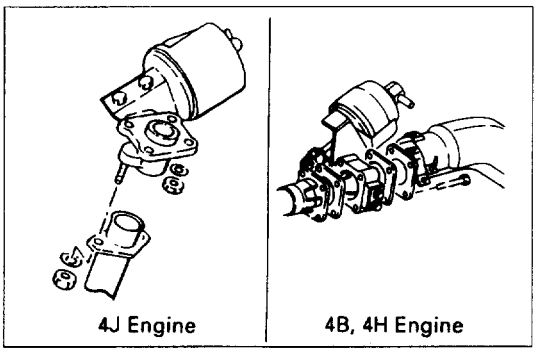

1. **Exhaust Brake Unit**

   Tighten the brake unit fixing nuts and/or bolts to the specified torque.

   Exhaust Brake Unit Fixing Nut and Bolt — N·m (kg·m/lb·ft)

4J Engine	4B, 4H Engine
37 (3.8/27)	17 (1.7 / 12)

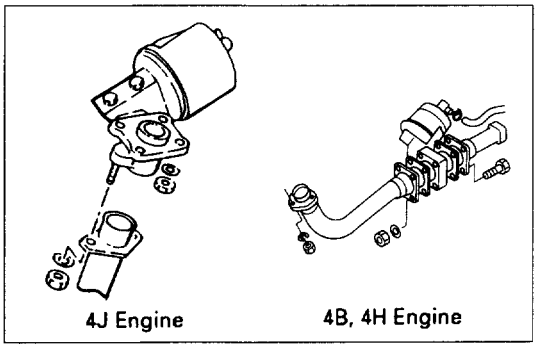

2. **Exhaust Pipe**
3. **Flange Nut**

   Tighten the exhaust pipe flange nuts for the exhaust manifold to the specified torque.

   Flange Nut Torque — N·m (kg·m/lb·ft)

4J, 4B Engine	4H Engine
37 (3.8 / 27)	67 (6.8 / 49)

4. **Vacuum Hose and Clip**

UNIT REPAIR

DISASSEMBLY

Exhaust Brake Unit

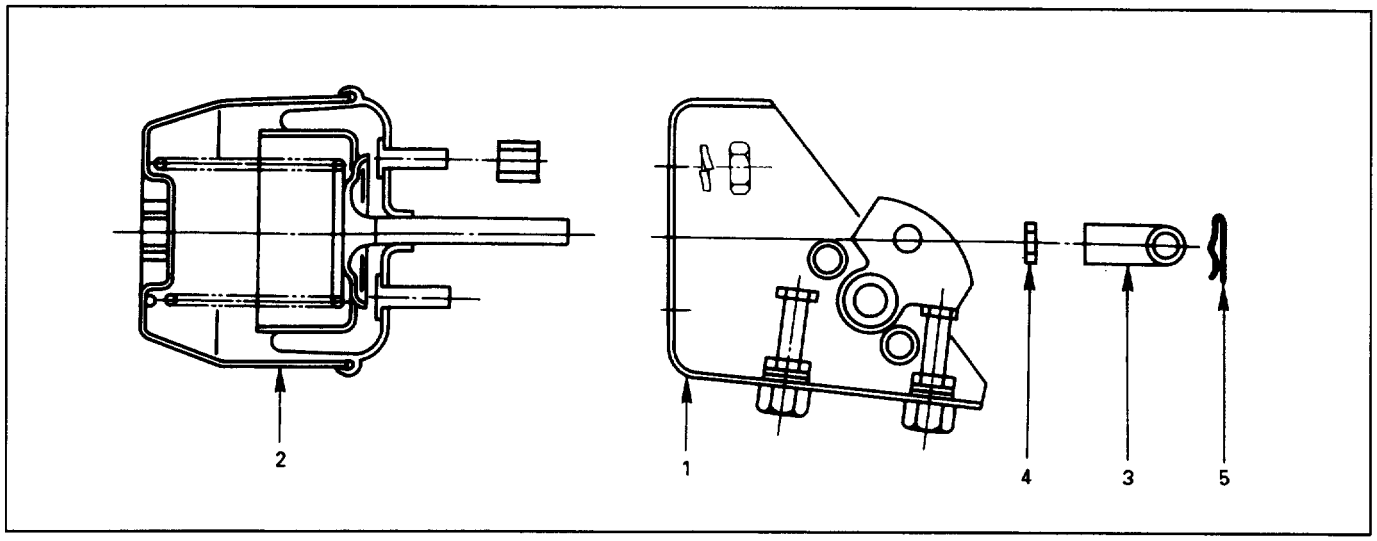

Disassembly Steps

1. Cotter pin
2. Lock nut
3. Clevis joint
4. Power chamber
5. Exhaust valve assembly

Disassembly Steps

1. **Cotter Pin**
2. **Lock Nut**
3. **Clevis Joint**
4. **Power Chamber**
5. **Exhaust Valve Assembly**

INSPECTION AND REPAIR

Make the necessary adjustments, repairs, and part replacements if excessive wear or damage is discovered during inspection.

Visual Inspection

Visually inspect the following parts for excessive wear and damage.

If excessive wear or damage is discovered during inspection, the part(s) must be replaced.

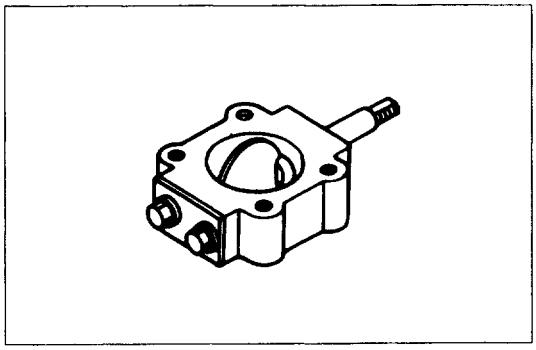

Exhaust brake valve
Exhaust brake shaft
Butterfly valve
Bushings
Power chamber

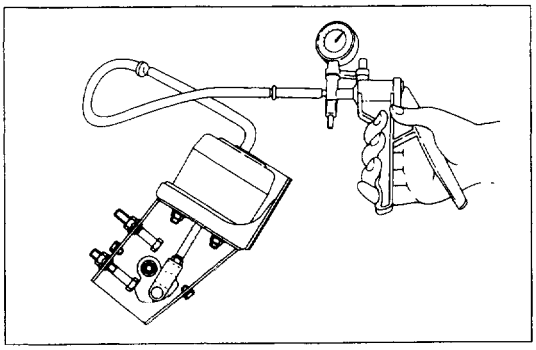

Power Chamber

(3) Power Chamber

The exhaust brake valve should operate smoothly when the negative pressure (400 mmHg to 700 mmHg) is applied to the power chamber via the vacuum pump.

(4) At the points "A" and "B", the average clearance between the valve and the vehicle body should be as mentioned in the following table when the negative pressure (650 mmHg to 700 mmHg) is applied to the power chamber via the vacuum pump.

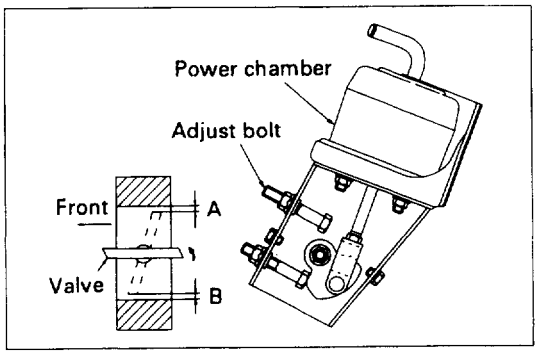

Clearance Between Valve and Body — mm (in)

	Standard
4HF1 Engine	0.4 – 0.6 (0.016 – 0.024)
Others	0.1 – 0.2 (0.004 – 0.008)

REASSEMBLY

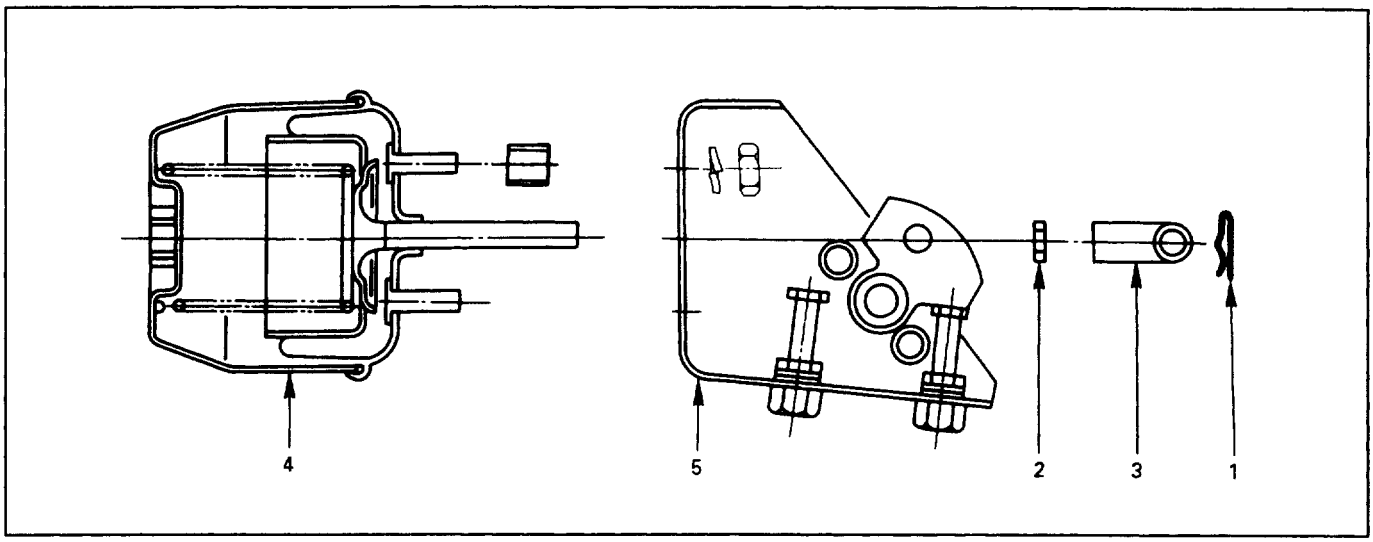

Reassembly Steps

1. Exhaust valve assembly
2. Power chamber
3. Lock nut
4. Clevis joint
5. Cotter pin

Reassembly Steps

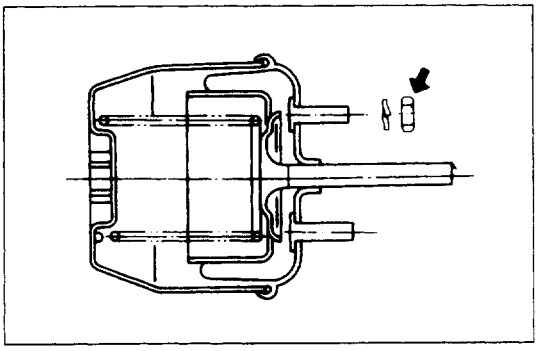

1. Exhaust Valve Assembly

2. Power Chamber

Power Chamber Fixing Nut Torque	N·m (kg·m/lb·ft)
17 (1.7 / 12)	

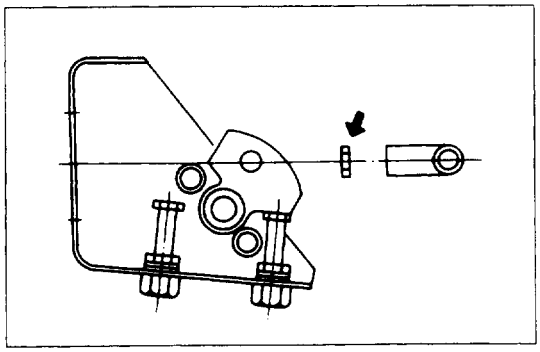

3. Lock Nut

Lock Nut Torque	N·m (kg·m/lb·in)
13 (1.3 / 113)	

4. Clevis Joint

5. Cotter Pin

LGBRK-WE-481

You are requested to order this manual using the manual number that is shown above.

This manual is applicable for vehicles in all countries except the USA and Canada.

All rights reserved. This manual may not be reproduced in whole or in part, without the permission in writing of ISUZU MOTORS LIMITED.

Issued by

ISUZU MOTORS LIMITED

INTERNATIONAL SERVICE DEPARTMENT

Tokyo, Japan

First edition Feb., 1998 8010-15K-0.2

No.LGBRK-WE-481 PRINTED IN JAPAN